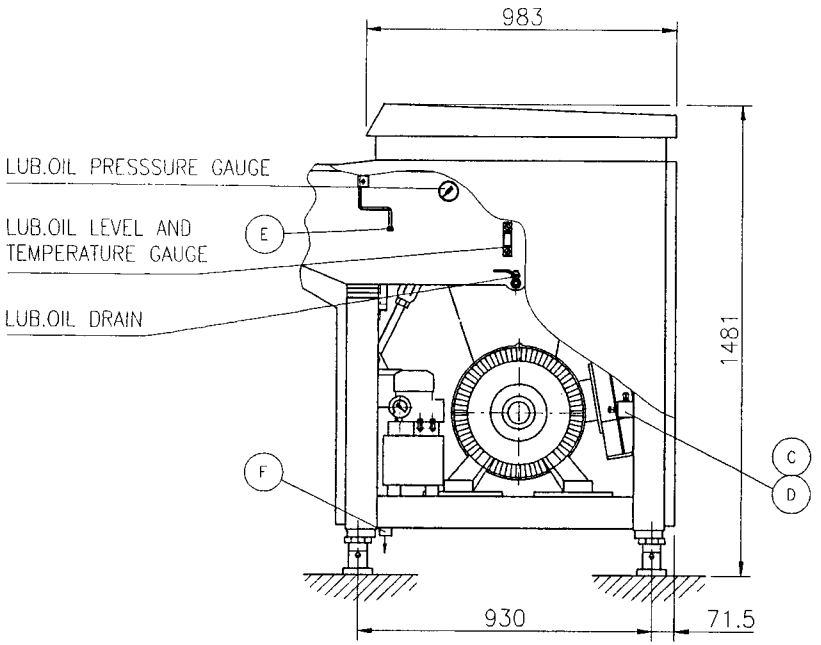

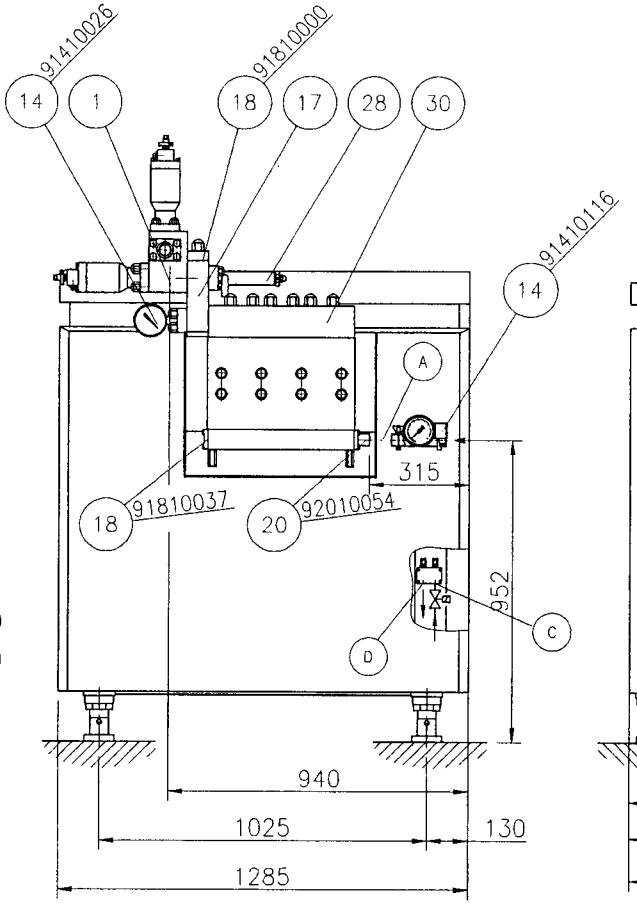

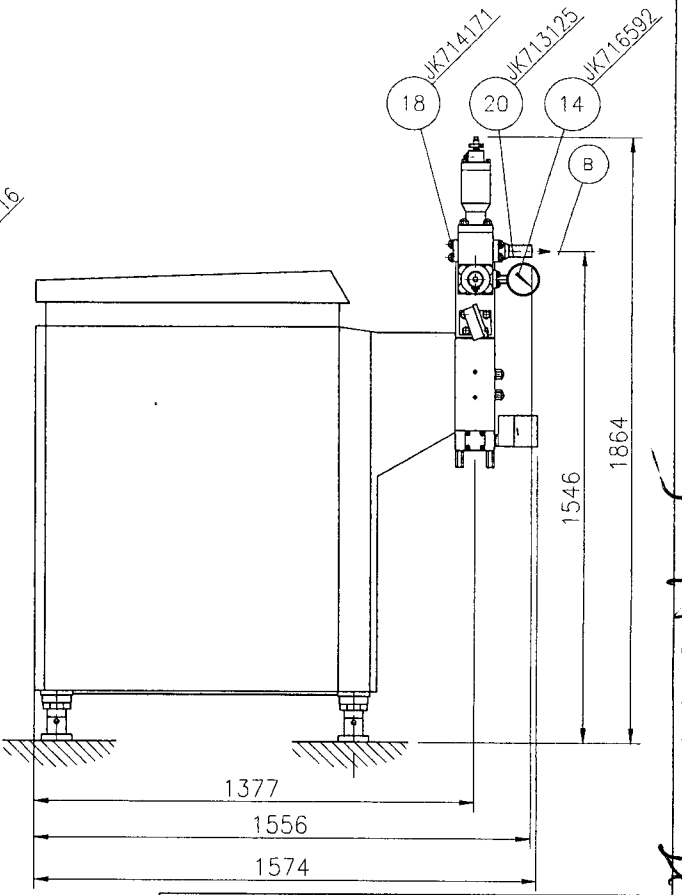

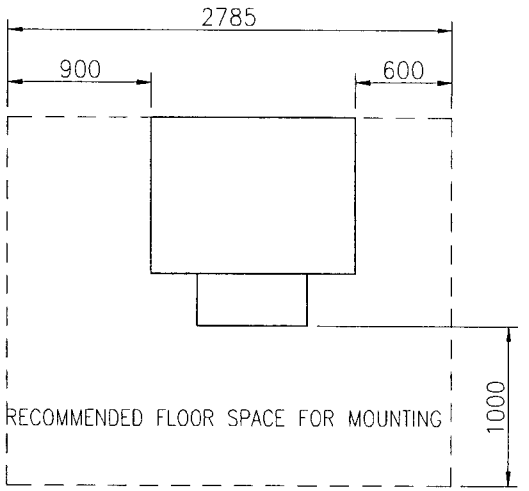

MACHINE WEIGHT INCL. MOTOR APPROX.: 1500 Kg

CONNECTIONS

POS.	SIZE	DESCRIPTION
A	NOM.38	PRODUCT INLET
B	NOM.38	PRODUCT OUTLET
C	R1/2"	COOLING WATER INLET
D	R1/2"	COOLING WATER OUTLET
E	R3/8"	PLUNGER FLUID INLET
F	HOSE	PLUNGER WELL DRAIN LINE

APV 37KW/D.81

INSTALLATIONSTEGNING
INSTALLATION DRAWING
INSTALLATIONSZEICHNUNG
DESSIN D'INSTALLATION

	Dato	Sign.	Erstatter
Tegn.	15.06.01	JMI	Nr. 1-01.164
Kontr.			
Rev.			Mat. no.:

Erstattet af

APV RANNIE — APV HOMOGENISERS AS COPENHAGEN

Ny tegning 01.11.02

Control panel door

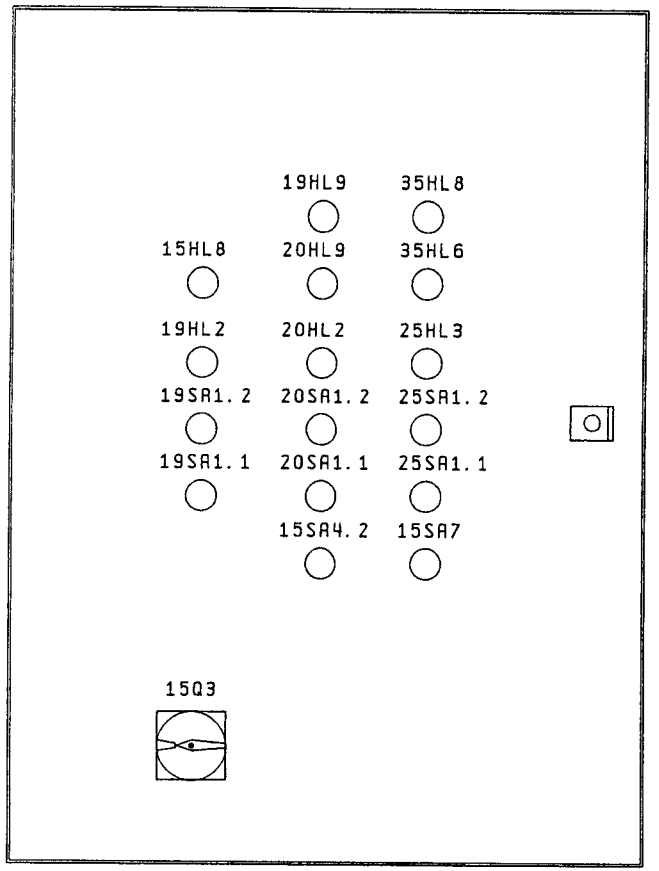

15Q3	Main switch
15SA4.2	Emergency stop
15SA7	Reset alarms
15HL8	Power ON
19SA1.1	Feed pump stop
19SA1.2	Feed pump start
19HL2	Running lamp. Feed pump
19HL9	Alarm lamp. Inlet pressure
20SA1.1	Main motor stop
20SA1.2	Main motor start
20HL2	Running lamp. Main motor
20HL9	Alarm lamp. Oil press.
25SA1.1	Hydraulic pump stop
25SA1.2	Hydraulic pump start
25HL3	Running lamp. Hydraulic pump
35HL6	Alarm lamp. Lubrication water flow missing
35HL8	Alarm lamp. Cooling water flow missing

15Q3	Hoved afbryder
15SA4.2	Nødstop
15SA7	Reset alarmer
15HL8	Driftklar
19SA1.1	Fødetrykspump stop
19SA1.2	Fødetrykspump start
19HL2	Drift lamp. Fødetrykspump
19HL9	Alarm lampe fødetryk
20SA1.1	Homogernisator stop
20SA1.2	Homogernisator start
20HL2	Drift lampe Homogernisator
20HL9	Alarm lampe Oil tryk
25SA1.1	Hydraulik pumpe stop
25SA1.2	Hydraulik pumpe start
25HL3	Drift lampe Hydraulik pumpe
35HL6	Alarm lampe Smørrevandflow mangler
35HL8	Alarm lampe Kølevandflow mangler

THIS DRAWING MUST NOT BE COPIED OR DISCLOSED TO A THIRD PARTY WITHOUT OUR PERMISSION

DRWG. NO. 1-01.164

APV

APV SYSTEMS
Homogenisers
2620 ALBERTSLUND DENMARK

C		
B		
A		
Opr.	JAP	15. Jun. 2001
Rev.	Constr.	Date

Manuel Hydraulic
Front page

Project
APV37-30.81

Filnavn: 1-01.164EC
Drawing no.: 1-01.164

Page: 5
2/06/JP

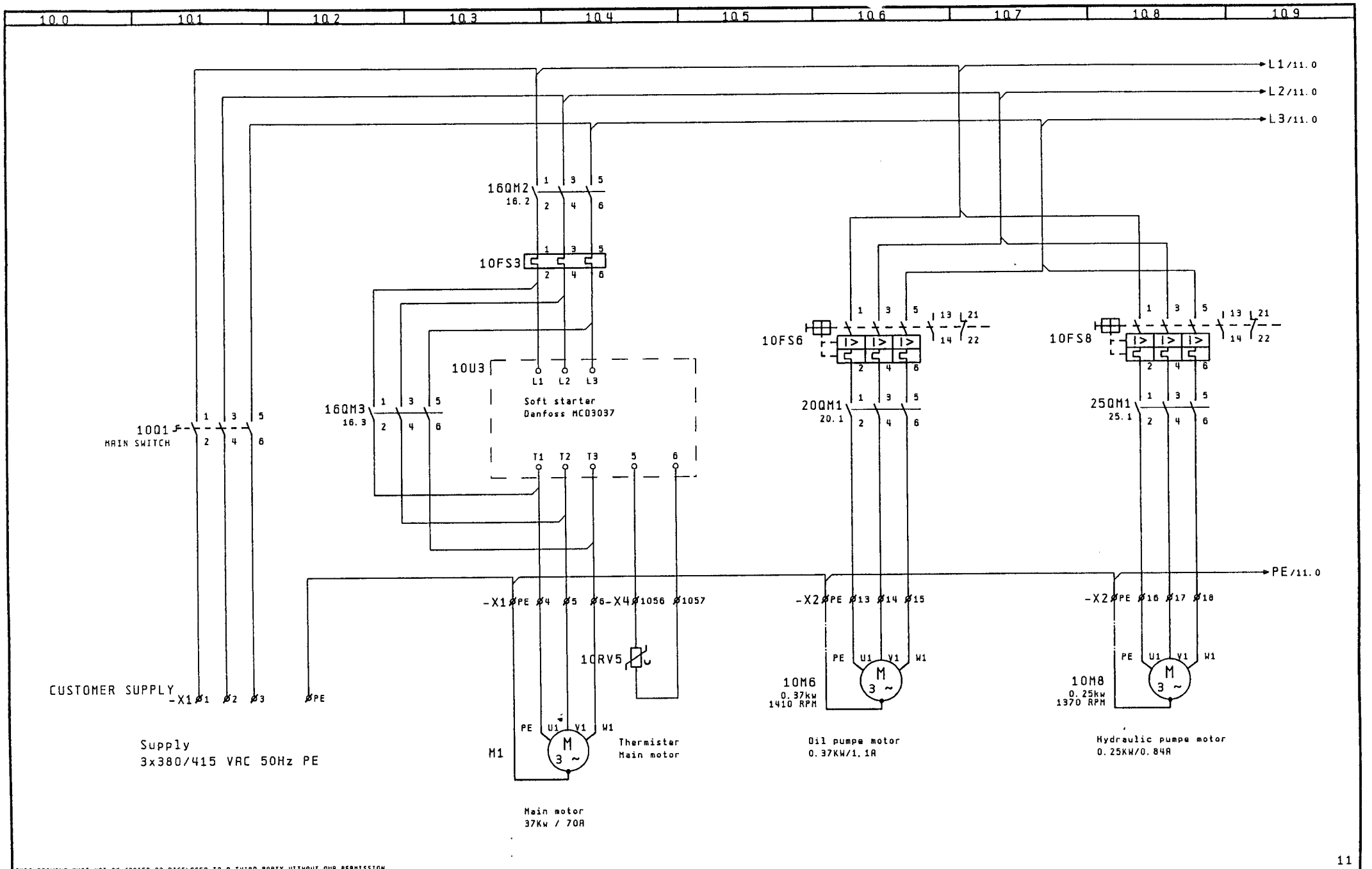

THIS DRAWING MUST NOT BE COPIED OR DISCLOSED TO A THIRD PARTY WITHOUT OUR PERMISSION

DRWG. NO. 1-01.164	APV SYSTEMS Homogenisers 2620 ALBERTSLUND DENMARK	C B A Opr. JAP 18. Jun. 2001 Rev. Constr. Date	Manuel Hydraulic Main motor control	Project APV37-30.81	Filnavn: 1-01.164EC Drawing no.: 1-01.164
					= + Page: 10 21/06/01 JP

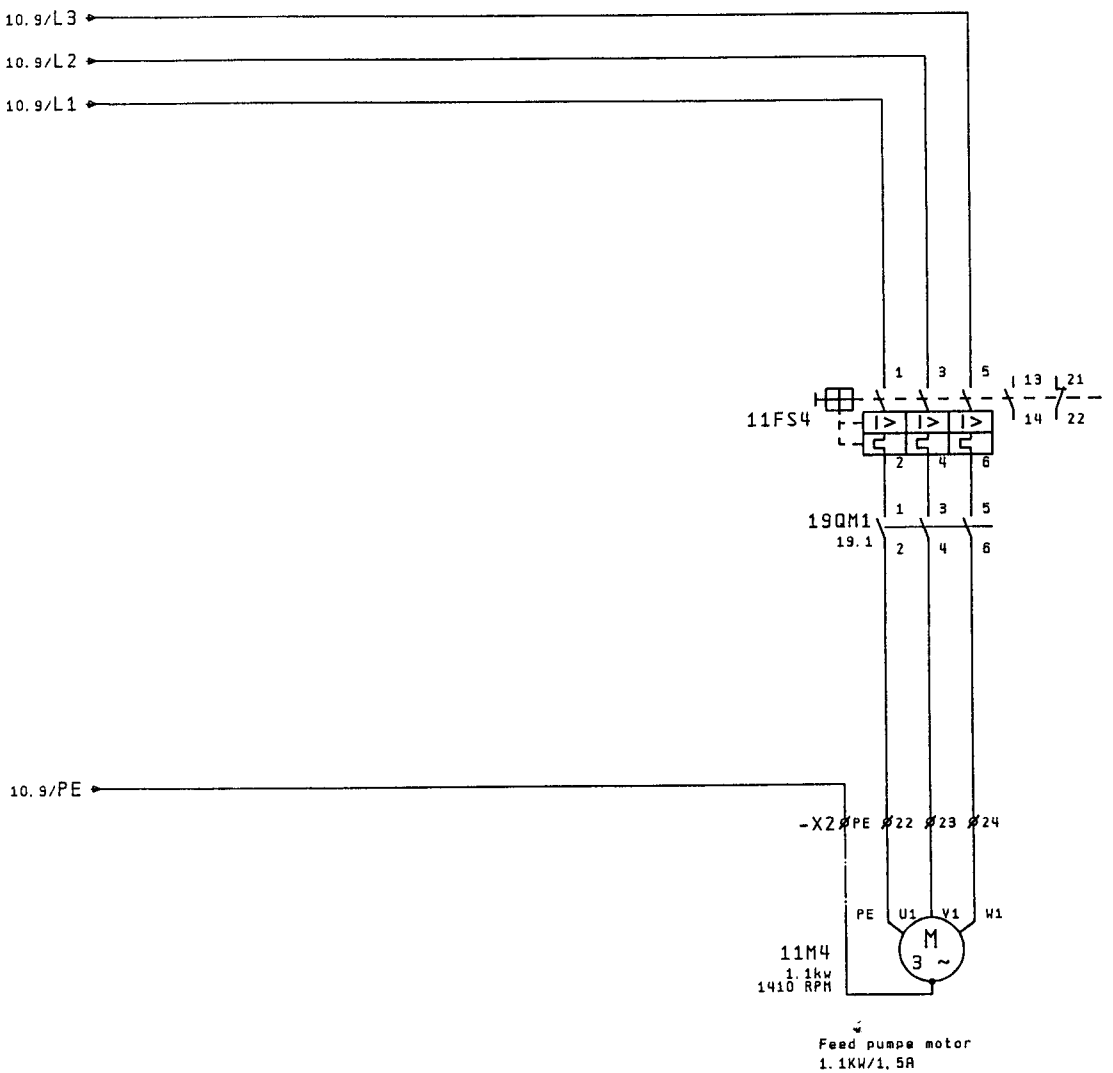

THIS DRAWING MUST NOT BE COPIED OR DISCLOSED TO A THIRD PARTY WITHOUT OUR PERMISSION

DRWG. NO. 1-01.164

APV

APV SYSTEMS
Homogenisers
2620 ALBERTSLUND DENMARK

C		
B		
A		
Opr.	JAP	16.08.2001
Rev.	Constr.	Date

Manuel Hydraulic
Main motor control

Project
APV37-30.81

Filnavn: 1-01.164EC
Drawing no.:
1-01.164

Page: 11
21661 JP

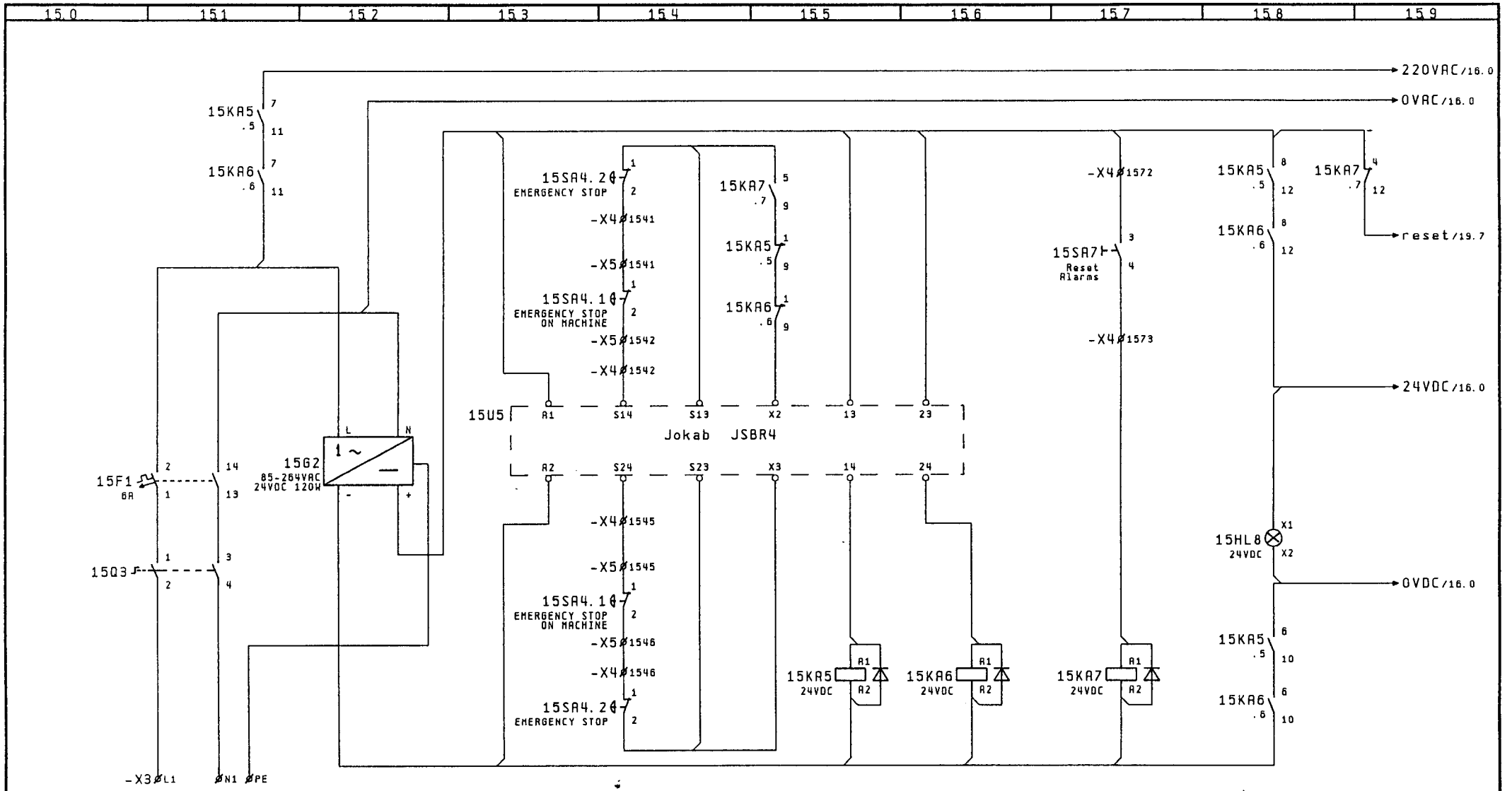

THIS DRAWING MUST NOT BE COPIED OR DISCLOSED TO A THIRD PARTY WITHOUT OUR PERMISSION

DRWG.NO. 1-01.164

APV SYSTEMS
Homogenisers
2620 ALBERTSLUND DENMARK

C		
B		
A		
Opr.	JAP	18. Jun. 2001
Rev.	Constr.	Date

Manuel Hydraulic
Pover supply

Project
APV37-30.81

Filnavn: 1-01.164EC
Drawing no.:
1-01.164

Page: 15
210601 P

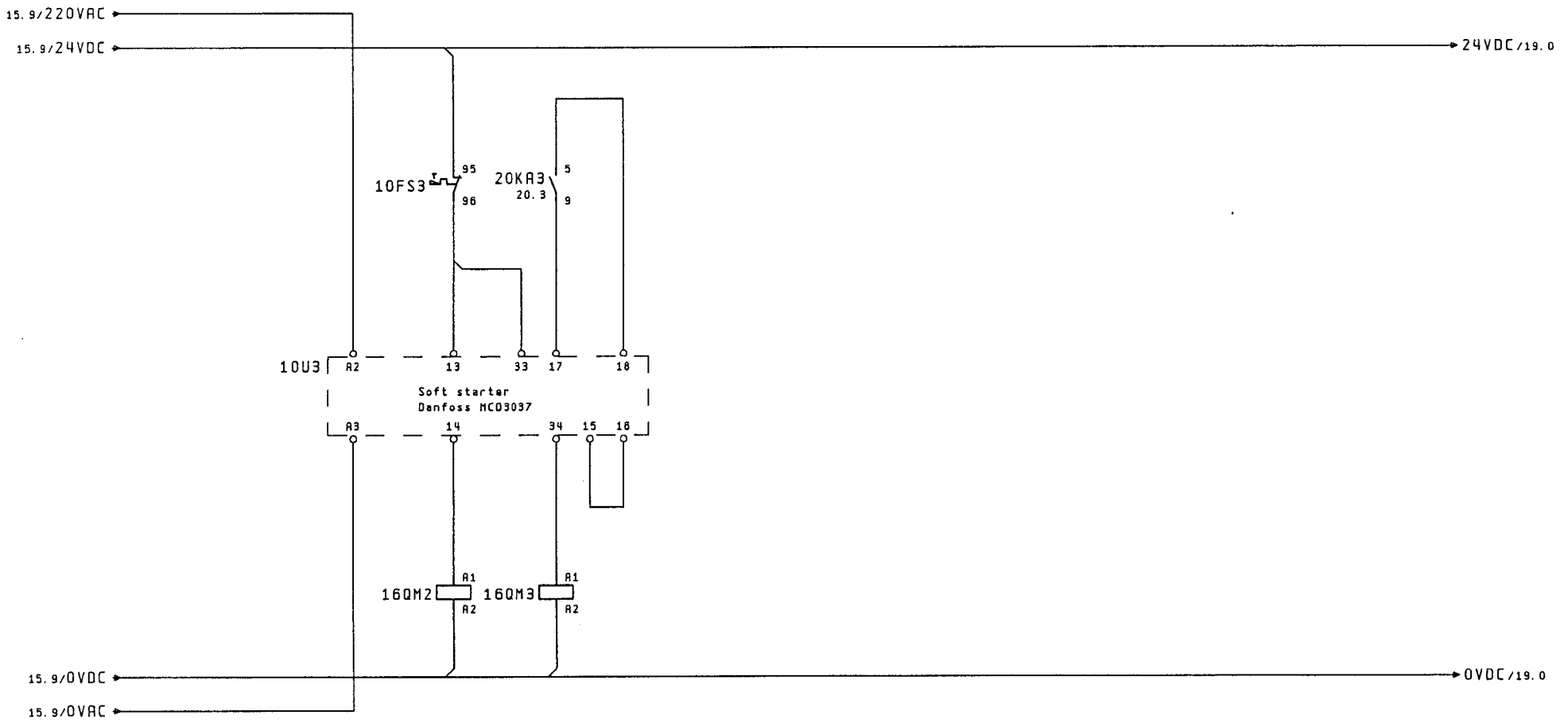

1 -/- 2 10.3
3 -/- 4 10.4
5 -/- 6 10.4

1 -/- 2 10.2
3 -/- 4 10.2
5 -/- 6 10.3
13 -/- 14 25.1

THIS DRAWING MUST NOT BE COPIED OR DISCLOSED TO A THIRD PARTY WITHOUT OUR PERMISSION

DRWG. NO. 1-01.164

APV

APV SYSTEMS
Homogenisers
2620 ALBERTSLUND DENMARK

C		
B		
A		
Opr.	JAP	18. Jun. 2001
Rev.	Constr	Date

Manuel Hydraulic
Start-stop control

Project
APV37-30.81

Filnavn: 1-01.164EC
Drawing no.:
1-01.164

=
+
Page: 16
27/06/01

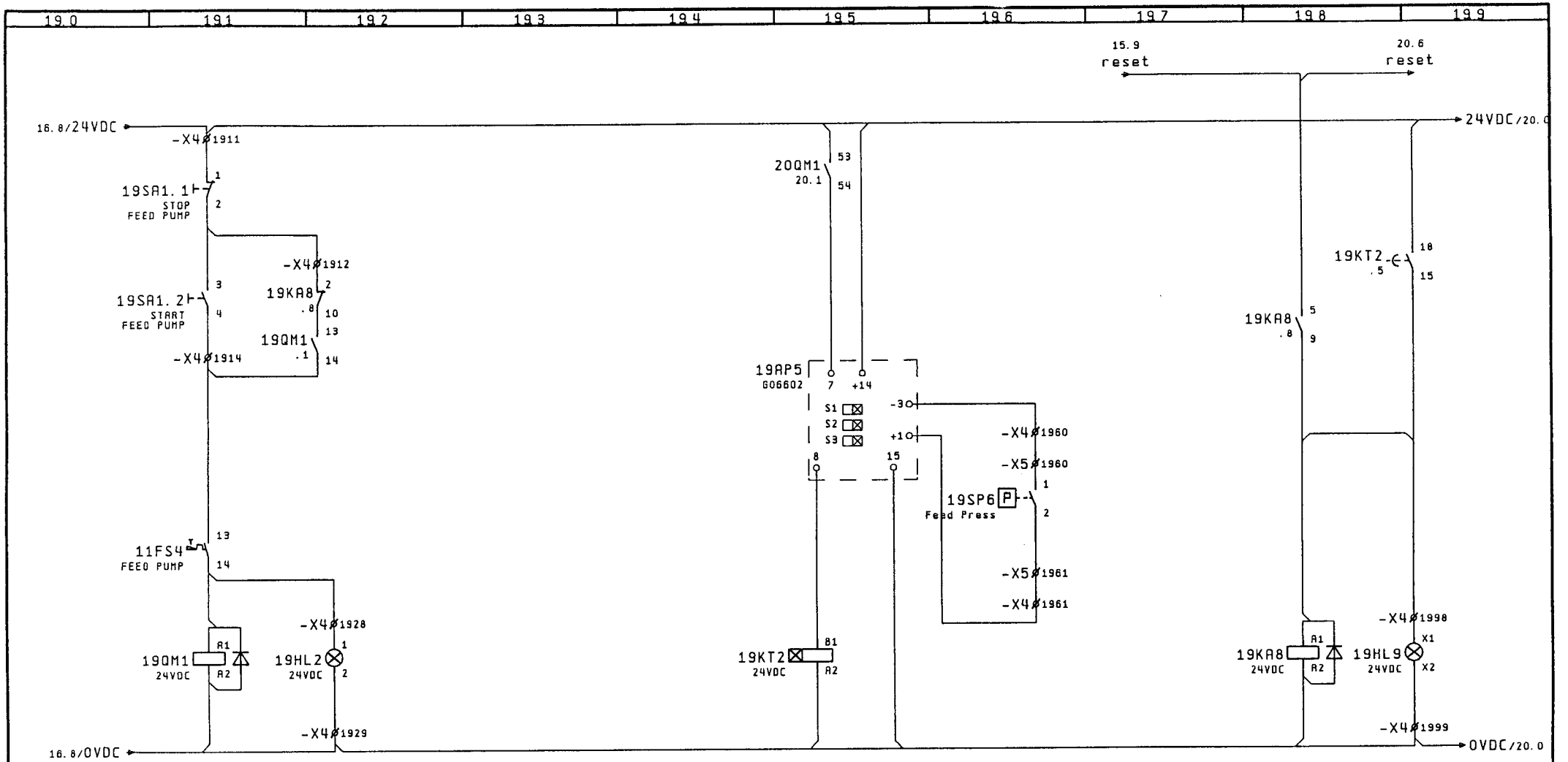

THIS DRAWING MUST NOT BE COPIED OR DISCLOSED TO A THIRD PARTY WITHOUT OUR PERMISSION

20

DRWG. NO. 1-01.164	APV SYSTEMS Homogenisers 2620 ALBERTSLUND DENMARK	C B A Opr. DAO 18.06.2001 Rev. Constr. Date	Manuel Hydraulic Start-stop control	Project APV37-30.81	Filnavn: 1-01.164EC Drawing no.: 1-01.164	= + Page: 19 2/abolJ	

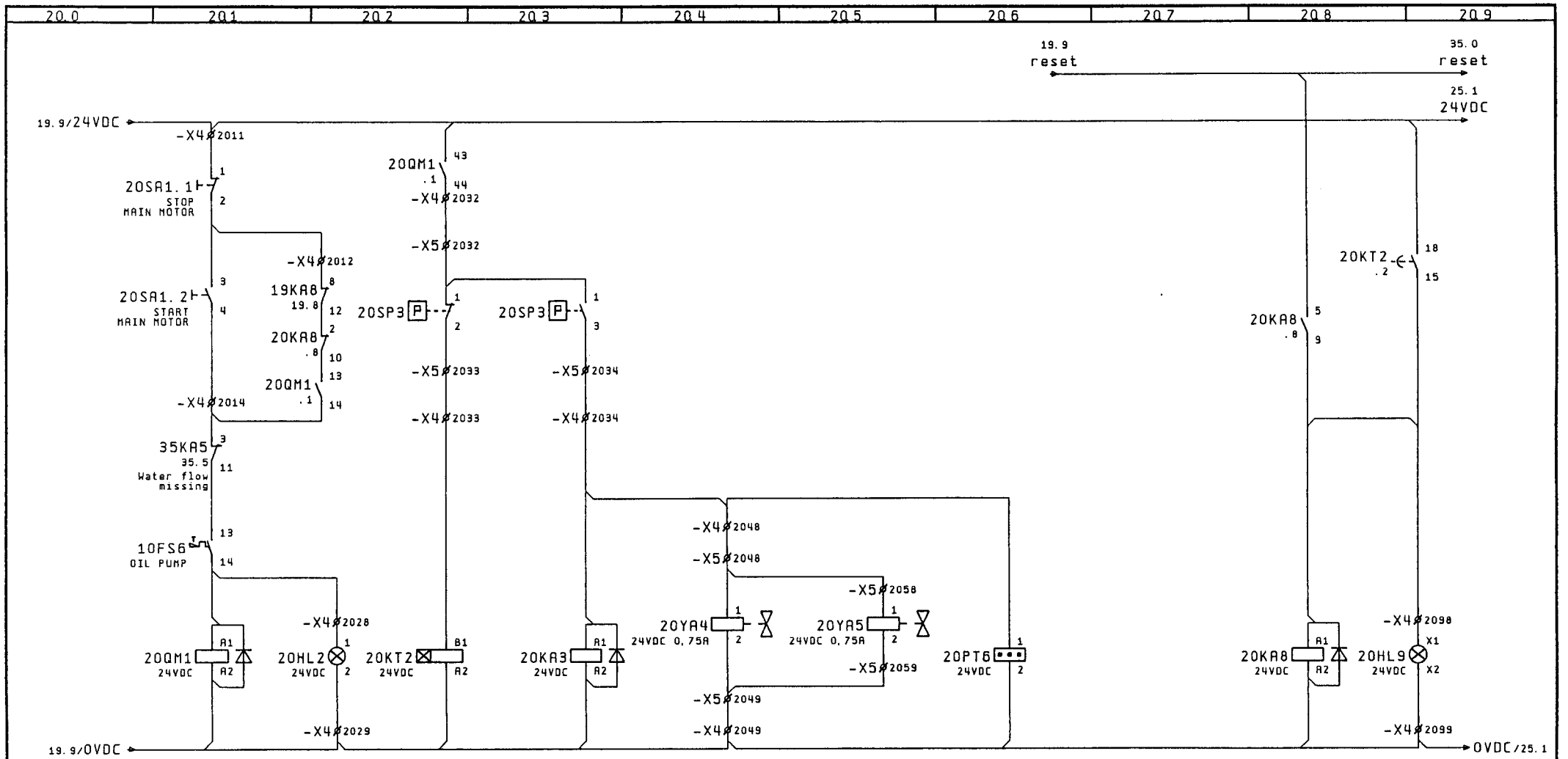

Oil pump start command

1 — 2 10.6
3 — 4 10.6
5 — 6 10.6
13 — 14 .2
43 — 44 .2
53 — 54 19.5

Running lamp

Oil press. control timer

15 — 18 .9

Main motor start command

6
2 — 10 35.1
8
4 — 12 35.3
5 — 9 16.3

Cooling water valve

Lubrication cooling valve

Hour counter On DIN rail

Oil press. Alarm

2 — 10 .2
5 — 9 .8

Oil press. Lamp

THIS DRAWING MUST NOT BE COPIED OR DISCLOSED TO A THIRD PARTY WITHOUT OUR PERMISSION

DRWG. NO. 1-01.164	APV SYSTEMS Homogenisers 2620 ALBERTSLUND DENMARK	C B A Opr. JAP 18.06.2001 Rev. Constr. Date	Manuel Hydraulic Start-stop control	Project APV37-30.81	Filnavn:1-01.164EC Drawing no.: 1-01.164	= + Page: 20 210601

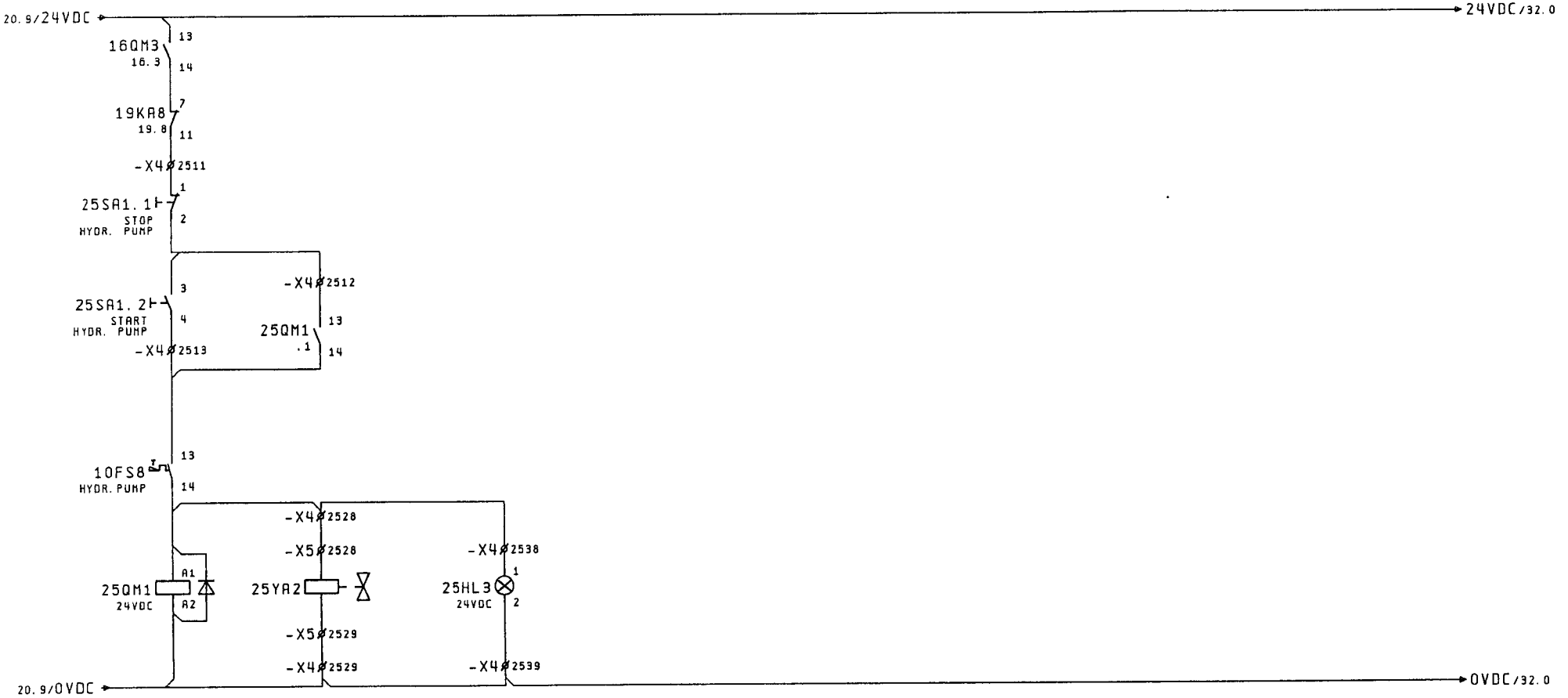

Hydraulic pump start command

Hydraulic Relieve valve 24VDC 0.75A

Running lamp

1	2	10.8
3	4	10.8
5	6	10.8
13	14	.2
43	44	32.2
53	54	32.7

THIS DRAWING MUST NOT BE COPIED OR DISCLOSED TO A THIRD PARTY WITHOUT OUR PERMISSION

DRWG. NO. 1-01.164

APV

APV SYSTEMS
Homogenisers
2620 ALBERTSLUND DENMARK

C		
B		
A		
Opr.	JAP	18. Jun. 2001
Rev.	Constr	Date

Manuel Hydraulic
Start-stop control

Project
APV37-30.81

Filnavn: 1-01.164EC
Drawing no.:
1-01.164

=
+
Page: 25
21060/3

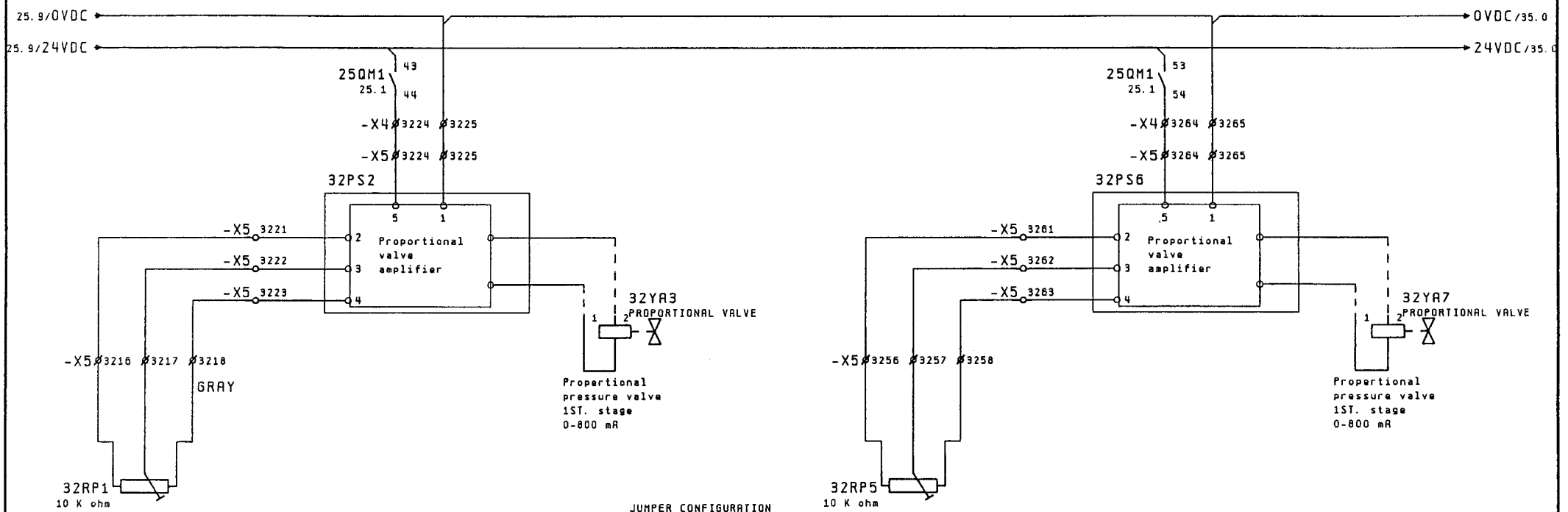

1st. stage

2nd. stage

JUMPER CONFIGURATION
PROPORTIONAL AMPLIFIER

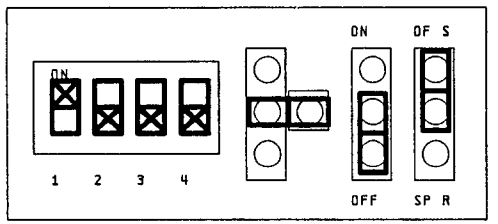

Manuel
Potentiometer
10 K ohm
1st. stage

Propertional
valve
1st. stage

Manuel
Potentiometer
10 K ohm
2nd. stage

Propertional
valve
2nd. stage

THIS DRAWING MUST NOT BE COPIED OR DISCLOSED TO A THIRD PARTY WITHOUT OUR PERMISSION

DRWG. NO. 1-01.164	APV SYSTEMS Homogenisers 2620 ALBERTSLUND DENMARK	C B A Opr. JAP 18. Jun. 2001 Rev. Constr Date	Manuel Hydraulic PRESSURE CONTROL	Project APV37-30.81	Filnavn:1-01.164EC Drawing no.: 1-01.164	= + Page: 32 2/3601

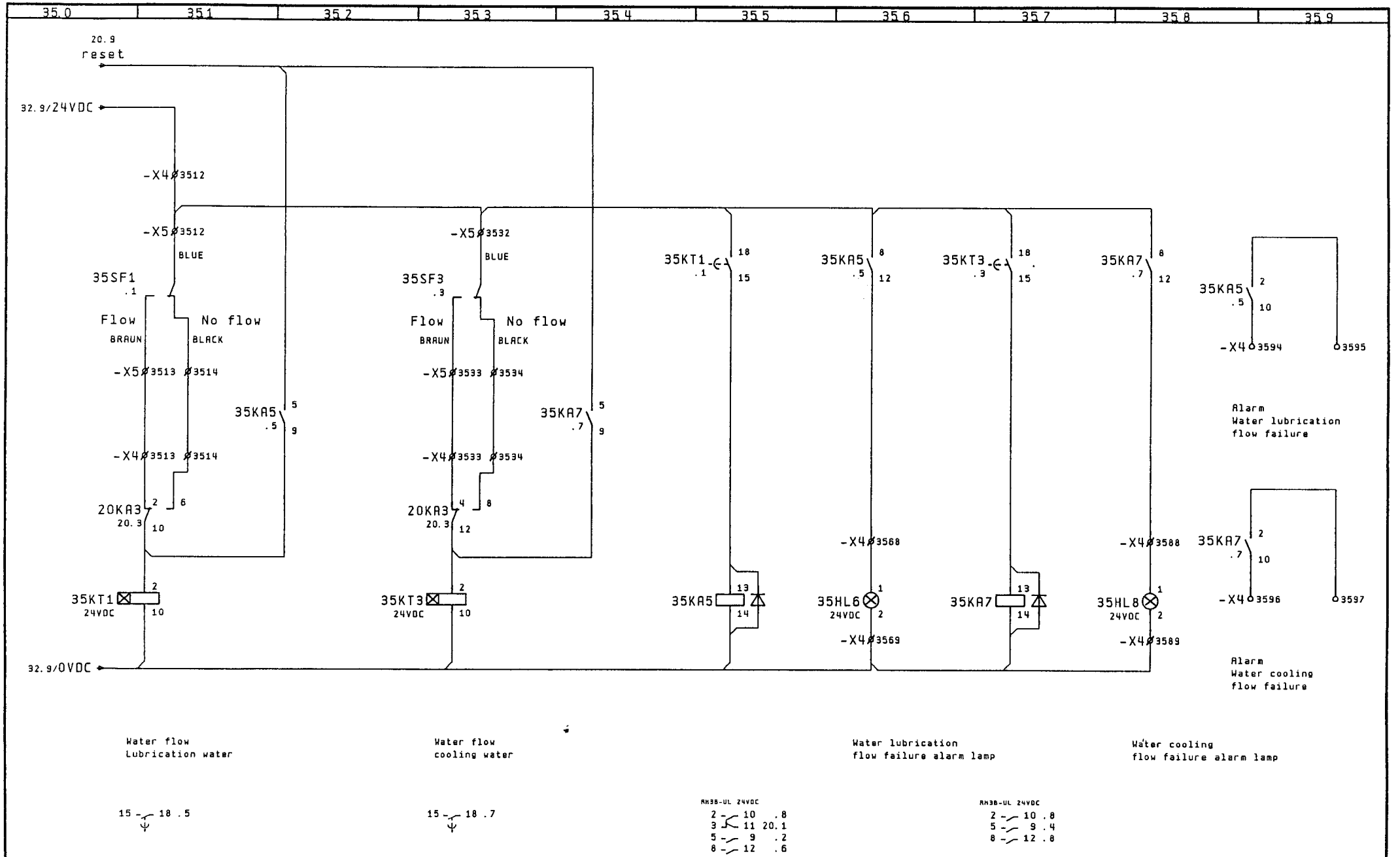

THIS DRAWING MUST NOT BE COPIED OR DISCLOSED TO A THIRD PARTY WITHOUT OUR PERMISSION

DRWG. NO. 1-01.164	APV SYSTEMS Homogenisers 2620 ALBERTSLUND DENMARK	C B A Opr. JAP 18.06.2001 Rev. Constr. Date	Manuel Hydraulic Water Flow Control	Project APV37-30.81	Filnavn: 1-01.164EC Drawing no.: 1-01.164	= + Page: 35 2/060/J

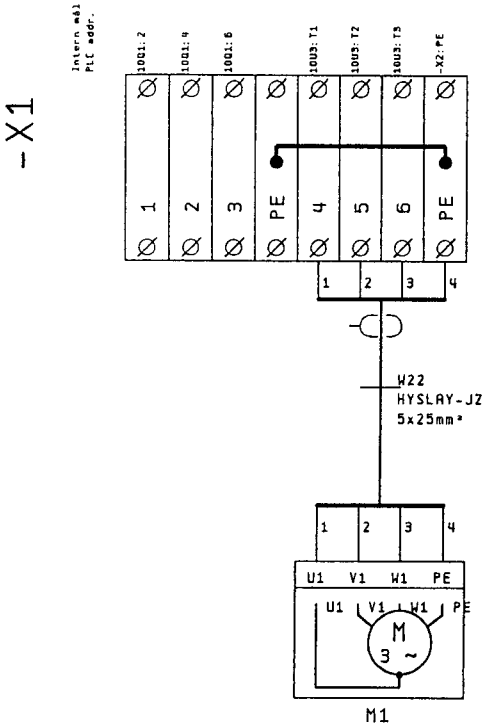

Supply
3x380/415V 50HZ

Main motor
37Kw / 70A

THIS DRAWING MUST NOT BE COPIED OR DISCLOSED TO A THIRD PARTY WITHOUT OUR PERMISSION

DRWG.NO. 1-01.164	APV SYSTEMS Homogenisers 2620 ALBERTSLUND DENMARK	C B A Opr. JAP 18.06.2001 Rev. Constr. Date	Manuel Hydraulic -X1	Project APV37-30.81	Filnavn:1-01.164EC Drawing no.: 1-01.164	= + Page: 60 2/060/J

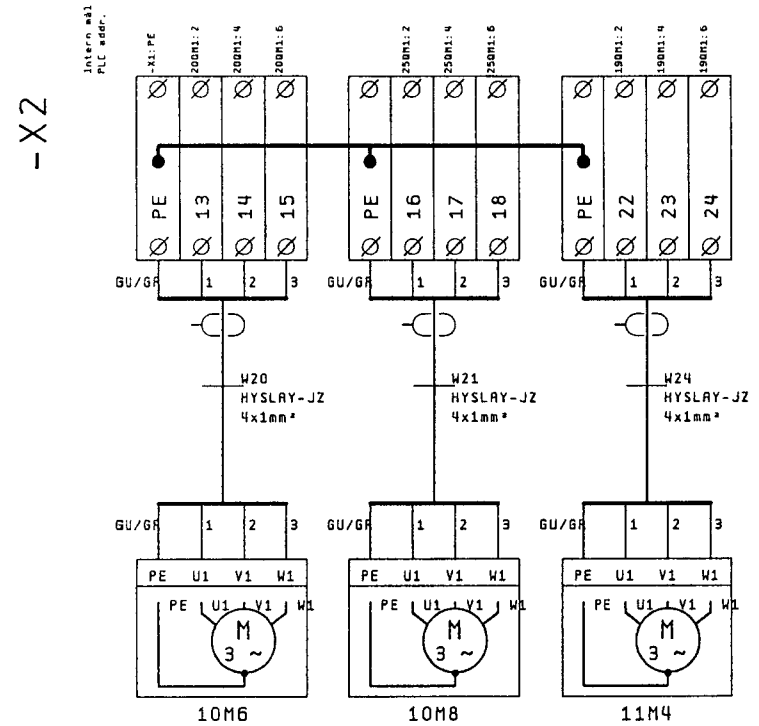

Oil pumpe motor

Hydraulic pumpe motor

Feed pumpe motor

THIS DRAWING MUST NOT BE COPIED OR DISCLOSED TO A THIRD PARTY WITHOUT OUR PERMISSION

DRWG.NO. 1-01.164	APV SYSTEMS Homogenisers 2620 ALBERTSLUND DENMARK	C B A Opr. JAP 18.06.2001 Rev. Constr. Date	Manuel Hydraulic -X2	Project APV37-30.81	Filnavn:1-01.164EC Drawing no.: 1-01.164	= + Page: 61 21060

62.0	62.1	62.2	62.3	62.4	62.5	62.6	62.7	62.8	62.9

-X3

Intern mal
PLC addr.

1503:2	1503:4	
L1	N1	PE

Supply:
85-264V 50-60Hz

THIS DRAWING MUST NOT BE COPIED OR DISCLOSED TO A THIRD PARTY WITHOUT OUR PERMISSION

DRWG.NO. 1-01.164

APV

APV SYSTEMS
Homogenisers
2620 ALBERTSLUND DENMARK

C		
B		
A		
Opr.	JAP	18.06.2001
Rev.	Constr.	Date

Manuel Hydraulic
-X3

Project
APV37-30.81

Filnavn:1-01.164EC
Drawing no.:
1-01.164

=
+
Page: 62
2106013

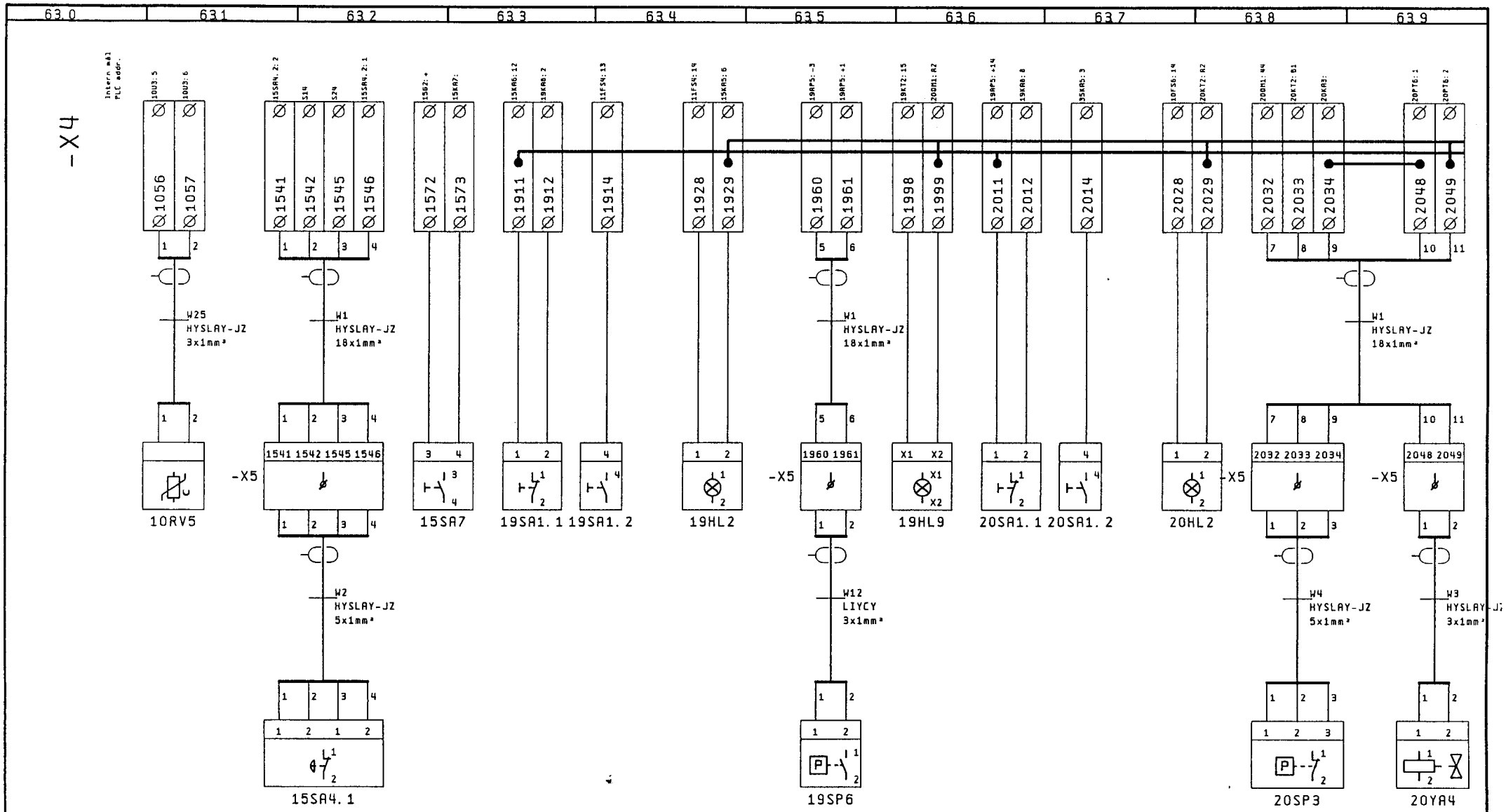

THIS DRAWING MUST NOT BE COPIED OR DISCLOSED TO A THIRD PARTY WITHOUT OUR PERMISSION

DRWG.NO. 1-01.164	APV SYSTEMS Homogenisers 2620 ALBERTSLUND DENMARK	C B A Opr. JAP 18.06.2001 Rev. Constr. Date	Manuel Hydraulic -X4	Project APV37-30.81	Filnavn: 1-01.164EC Drawing no.: 1-01.164	= + Page: 63 21060/J	

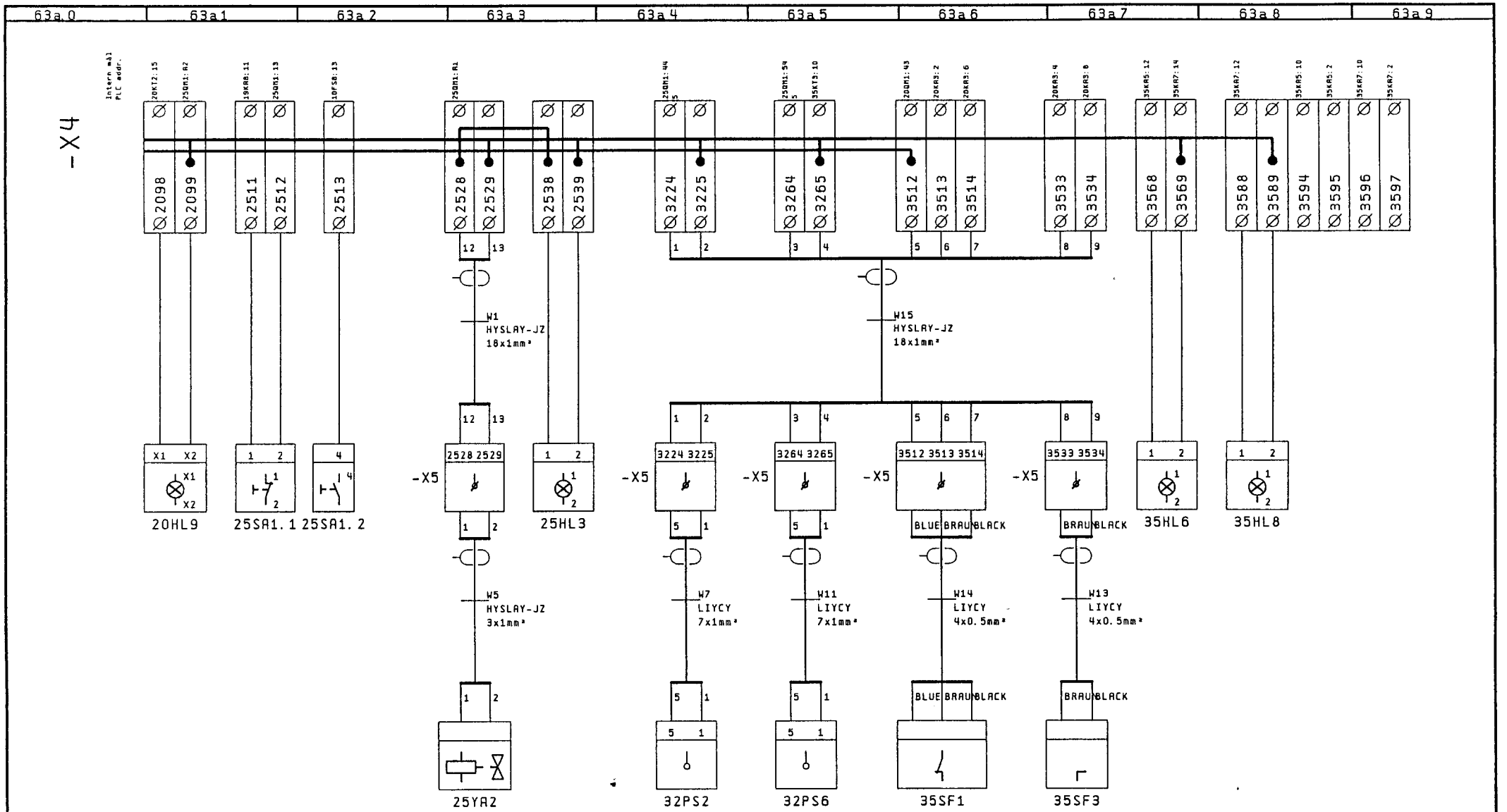

THIS DRAWING MUST NOT BE COPIED OR DISCLOSED TO A THIRD PARTY WITHOUT OUR PERMISSION

DRWG.NO. 1-01.164	APV SYSTEMS Homogenisers 2620 ALBERTSLUND DENMARK	C / B / A / Opr. JAP 18.06.2001 / Rev. Constr. Date	Manuel Hydraulic -X4	Project APV37-30.81	Filnavn: 1-01.164EC Drawing no.: 1-01.164 / = / + / Page: 63a 2/060/JP

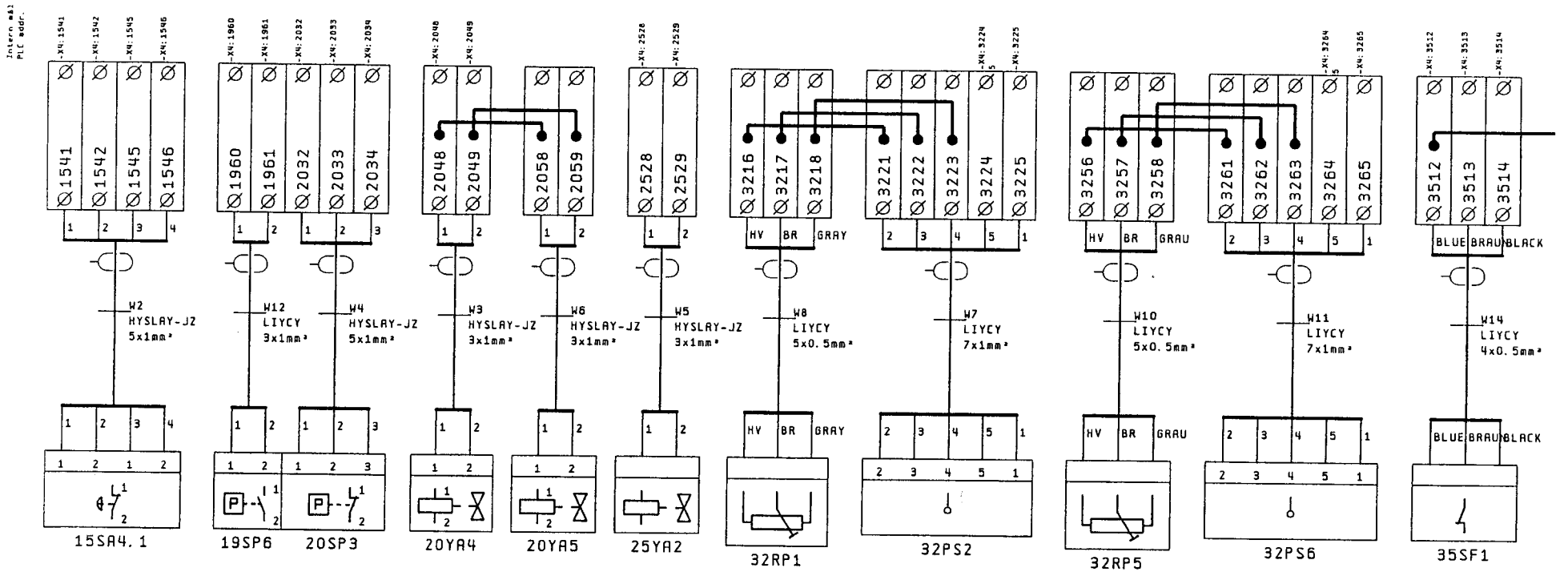

Emergency stop

Inline pressure

Oil press switch

Cooling water valve

Lubrication cooling valve

Hydraulic Relieve valve

Manuel Potentiomet 10k ohm 1st. stage

Proportional amplifier 1st. stage

Manuel Potentiomet 10k ohm 2nd. stage

Proportional amplifier 2nd. stage

Water flow Lubrication water

THIS DRAWING MUST NOT BE COPIED OR DISCLOSED TO A THIRD PARTY WITHOUT OUR PERMISSION

64a

DRWG. NO. 1-01.164

APV

APV SYSTEMS
Homogenisers
2620 ALBERTSLUND DENMARK

C		
B		
A		
Opr.	JAP	18.06.2001
Rev.	Constr.	Date

Manuel Hydraulic
-X5

Project
APV37-30.81

Filnavn: 1-01.164EC
Drawing no.: 1-01.164

Page: 64

2/06/01 JP

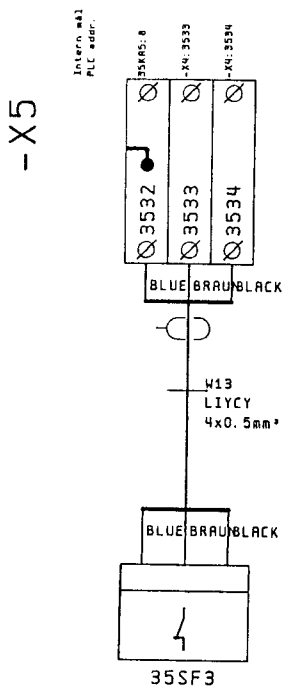

Water flow
cooling water

THIS DRAWING MUST NOT BE COPIED OR DISCLOSED TO A THIRD PARTY WITHOUT OUR PERMISSION

DRWG. NO. 1-01.164	APV SYSTEMS Homogenisers 2620 ALBERTSLUND DENMARK	C B A Opr. JAP 18.06.2001 Rev. Constr. Date	Manuel Hydraulic -X5	Project APV37-30.81	Filnavn:1-01.164EC Drawing no.: 1-01.164	= + Page: 64a 210601P	