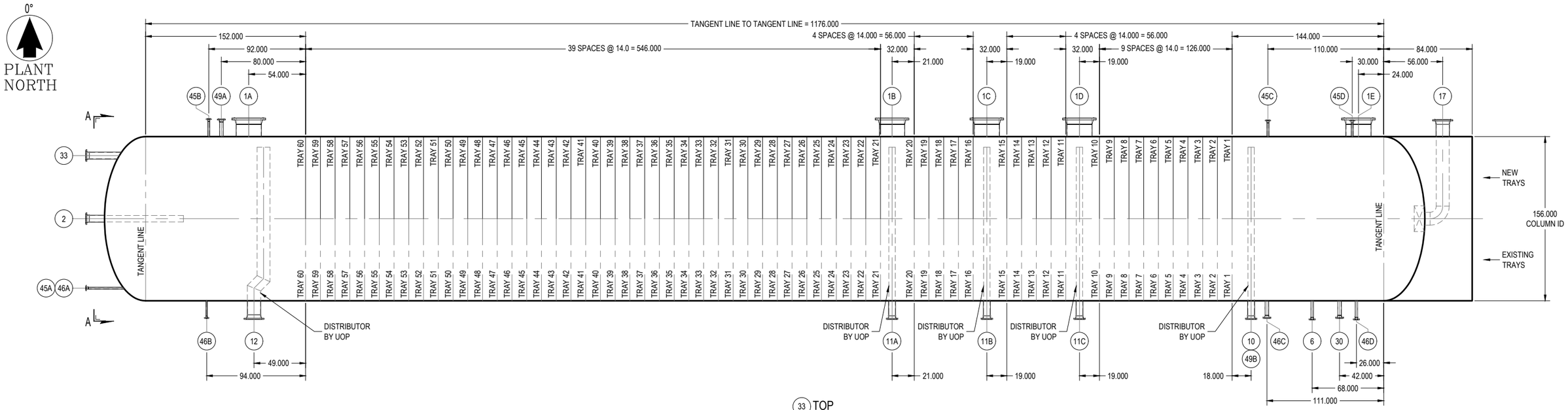

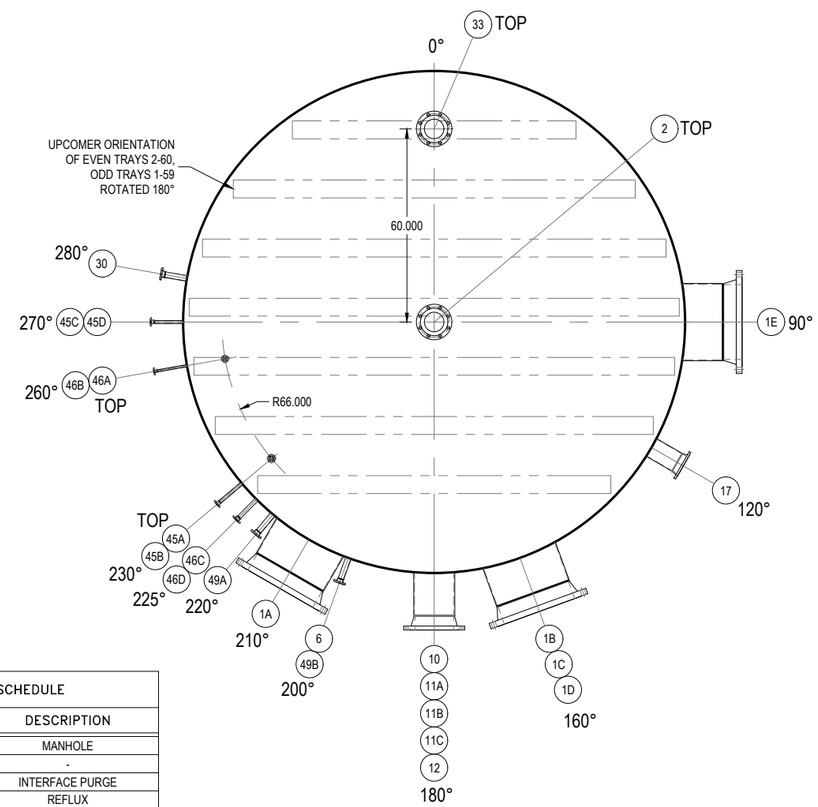

VIEW A-A
NOZZLE AND UPCOMER ORIENTATION FOR TRAYS 1-60
SCALE: 2X

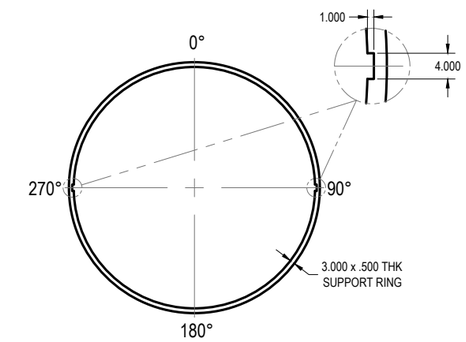

RING NOTCH FOR TRAYS 1-60
NOTCHES MAXIMUM SIZE ABOVE MAY BE CUT IN SUPPORT RINGS TO EASE UPCOMER INSTALLATION
SCALE: 1X

GENERAL NOTES FOR SURROGATE RING DESIGNS

1. TRAYS ARE NUMBERED FROM THE BOTTOM OF THE COLUMN.
2. ALL TRAY PARTS ARE DESIGNED TO PASS THROUGH A Ø22.375" MINIMUM ID MANHOLE.
3. ALL TOWER ATTACHMENTS, INCLUDING TRAY SUPPORT RINGS, ARE TO BE INSTALLED LEVEL WITHIN 1/8" HIGH POINT TO LOW POINT. SHIMS (PROVIDED BY OTHERS) SHOULD BE USED TO MEET LEVELNESS REQUIREMENT.
4. ALL TRAY SPACING DIMENSIONS ARE GIVEN FROM THE TOP OF THE SUPPORT RING TO THE TOP OF THE SUPPORT RING BELOW.
5. ABSOLUTELY NO WELDING, CUTTING, GOUGING, OR ARC STRIKING IS TO BE DONE TO THE TOWER SHELL OR HEADS. WELDING AND CUTTING IS TO BE DONE TO THE TOWER RINGS AND BRACKETS, IF NECESSARY.
6. ALL TOP SURFACES OF SUPPORT RINGS AND SUPPORT BRACKETS ARE TO BE FREE FROM SLAG, SCALE, AND DEBRIS.
7. TOLERANCES ON THE DIMENSIONS OF THE COLUMN INTERNALS, UNLESS OTHERWISE NOTED, ARE ±1/8" ON LINEAR DIMENSIONS AND ±1/8° ON ANGULAR DIMENSIONS.
8. TRAYS ARE DESIGNED TO ACCOMMODATE AN INSIDE TOWER DIAMETER OF 99.5% TO 100.5% OF THE NOMINAL.
9. DIMENSIONS ARE GIVEN IN INCHES AND PIPE SIZES ARE GIVEN IN INCHES UNLESS OTHERWISE NOTED.
10. ALL TOWER ATTACHMENTS ON THIS DRAWING TO BE REUSED.

NOZZLE SCHEDULE

NOZZLE	SIZE	DESCRIPTION
1A - 1E	24"	MANHOLE
2	6"	-
6	2"	INTERFACE PURGE
10	6"	REFLUX
11A	6"	FEED
11B	6"	FEED
11C	6"	FEED
12	12"	LEAN SOLVENT
17	12"	RICH SOLVENT
30	3"	STEAM OUT
33	6"	SAFETY VALVE
40A, 40B	-	-
45A - 45D	1 1/2"	LEVEL INST.
46A, 46B	3/4"	LEVEL GLASS
46C, 46D	2"	LEVEL GLASS STANDPIPE
49A, 49B	3"	D/P CONNECTION

1 DESIGN CONDITIONS

TOWER: MAWP 305 PSIG @ 350F

SYMBOL KEY

- XXXX PART NUMBER
- XX NOZZLE
- XX/X NOZZLE
- X REVISION
- XXX ASSEMBLY DETAIL
- XX NOTES

REV	ALTERATION	DATE	BY	CHK'D	REV'D	APPV'D
1	ISSUED CERTIFIED; ADDED DESIGN CONDITIONS	2/23/24	JAD	DMW 2/24	BJN 2/24	JRU 2/23/24

uop CERTIFIED DRAWING

CONFIDENTIAL

THE INFORMATION CONTAINED HEREIN IS PROPRIETARY INFORMATION AND SHALL NOT BE COPIED AND/OR REPRODUCED IN ANY MANNTER, NOR USED FOR ANY PURPOSE WHATSOEVER EXCEPT AS SPECIFICALLY PERMITTED PURSUANT TO WRITTEN AGREEMENT WITH UOP

CUSTOMER : CENOVUS ENERGY LIMA REFINERY
LOCATION : LIMA, OHIO, USA
ITEM NO. : DA-C-3001 TETRA EXTRACTOR
P.O. NO. : 8401698824

DIRECT INQUIRIES PERTAINING TO THIS DRAWING AND ASSOCIATED EQUIPMENT TO UOP TONAWANDA

TITLE: GENERAL ARRANGEMENT AND NOZZLE ORIENTATION

BY	DATE	SCALE
JAD	1/12/24	1:45
CHECKED DMW 1/24	NO. SHTS. 6	LATEST REVISION: 1
REVIEWED BJN 1/24	SHT.NO. 1	
APPROVED JRU 2/1/24		

Honeywell uop
175 E. PARK DRIVE
TONAWANDA, NY 14151-0986

DWG. NO. D- 2293968

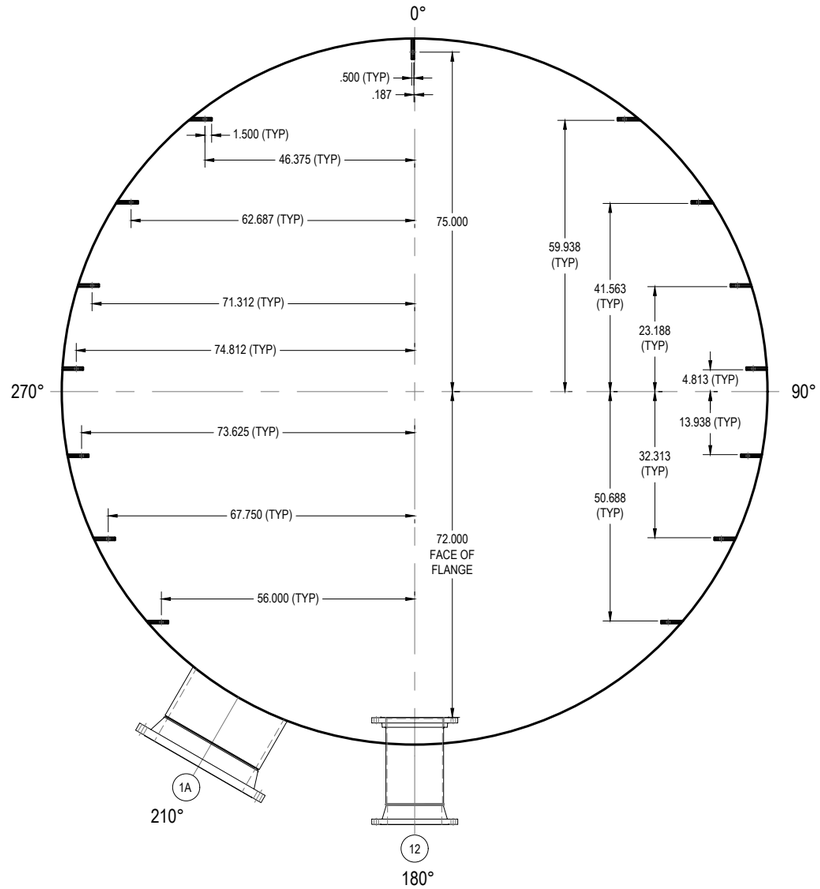

PLAN VIEW OF LEAN SOLVENT DISTRIBUTOR SUPPORTS ABOVE TRAY 60 (1)

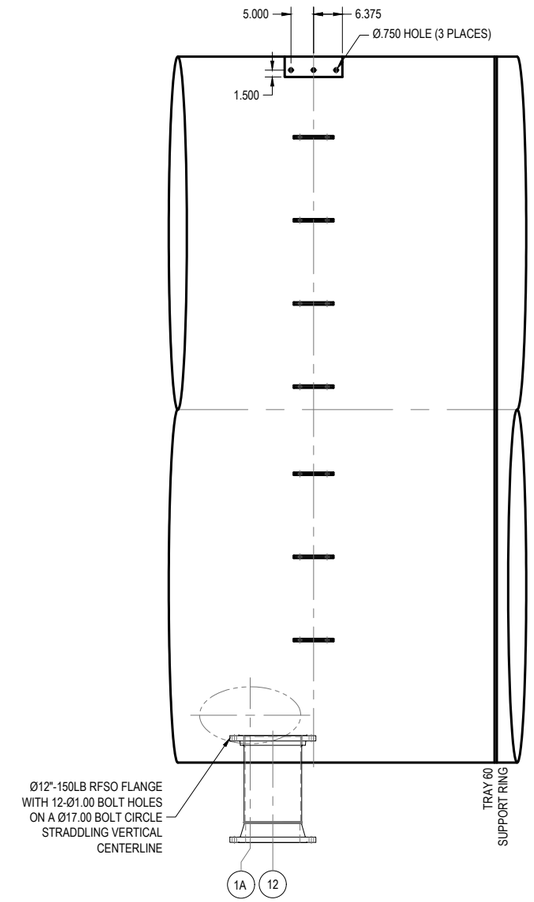

ELEVATION VIEW

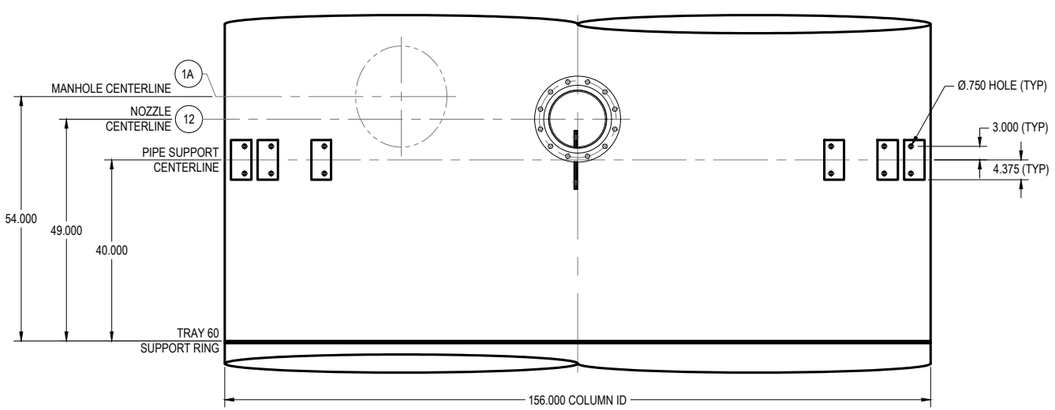

ELEVATION VIEW

(1) ALL EXISTING PIPE SUPPORTS TO BE REUSED

UOP CERTIFIED DRAWING

SYMBOL KEY	
XXXX	PART NUMBER
XX	NOZZLE
XX/X	NOZZLE
X	REVISION
XXX	ASSEMBLY DETAIL
XX	NOTES

CONFIDENTIAL

THE INFORMATION CONTAINED HEREIN IS PROPRIETARY INFORMATION AND SHALL NOT BE COPIED AND/OR REPRODUCED IN ANY MANNTER, NOR USED FOR ANY PURPOSE WHATSOEVER EXCEPT AS SPECIFICALLY PERMITTED PURSUANT TO WRITTEN AGREEMENT WITH UOP

CUSTOMER : CENOVUS ENERGY LIMA REFINERY
LOCATION : LIMA, OHIO, USA
ITEM NO. : DA-C-3001 TETRA EXTRACTOR
P.O. NO. : 8401698824

DIRECT INQUIRIES PERTAINING TO THIS DRAWING AND ASSOCIATED EQUIPMENT TO UOP TONAWANDA

TITLE:
TOWER ATTACHMENT
LEAN SOLVENT DISTRIBUTOR
SUPPORTS ABOVE TRAY 60

BY	DATE	SCALE
JAD	1/12/24	1:16
CHECKED DMW	1/24	NO. SHTS. 6
REVIEWED PJW	1/24	SHT.NO. 2
APPROVED JRU	2/1/24	LATEST REVISION: 1

Honeywell UOP
175 E. PARK DRIVE
TONAWANDA, NY 14151-0986

DWG. NO. D- 2293968

REV	ALTERATION	DATE	BY	CHK'D	REV'D	APPV'D
1	ISSUED CERTIFIED	2/23/24	JAD	DMW 2/24	PJW 2/24	JRU 2/23/24

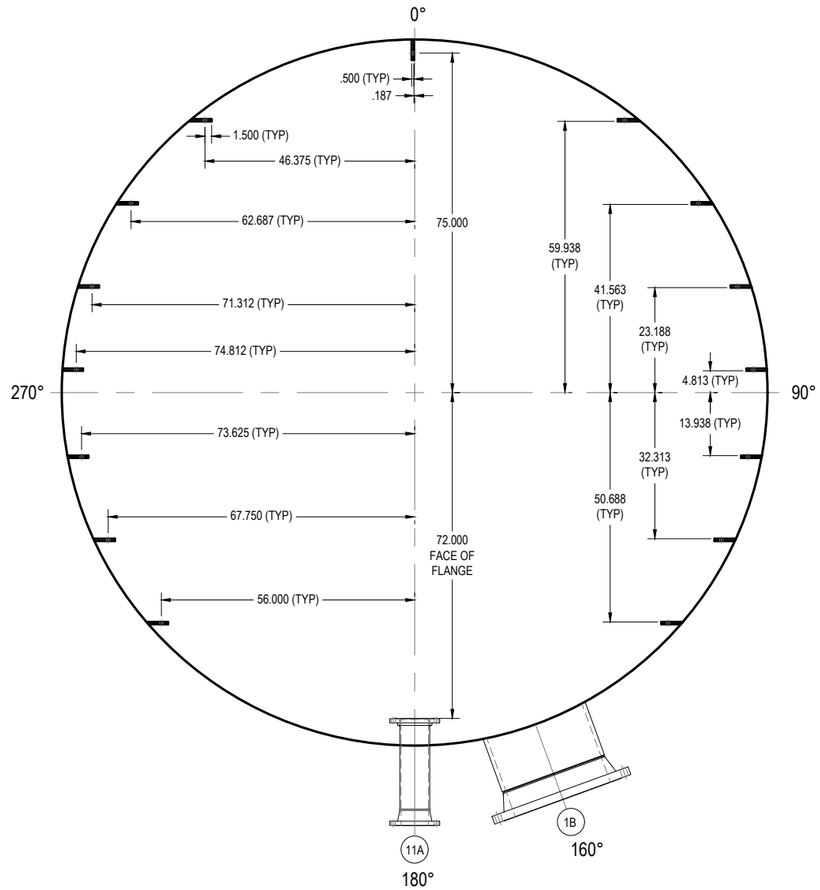

PLAN VIEW OF FEED 11A DISTRIBUTOR
SUPPORTS ABOVE TRAY 20 (1)

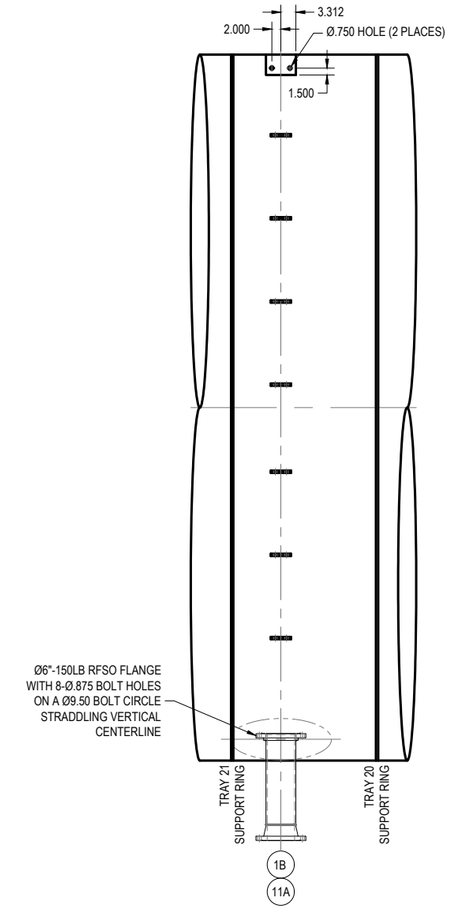

ELEVATION VIEW

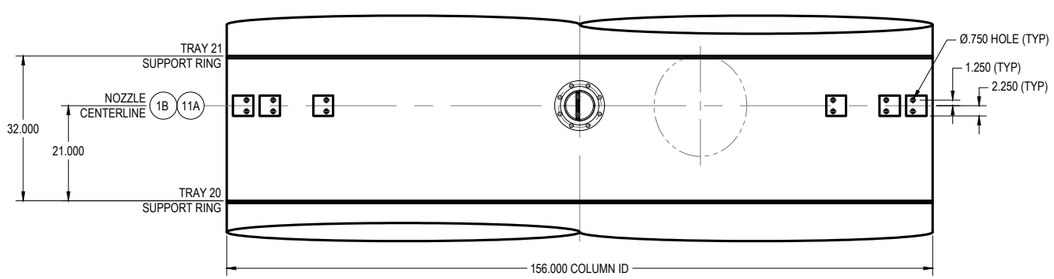

ELEVATION VIEW

(1) ALL EXISTING PIPE SUPPORTS TO BE REUSED

uop CERTIFIED DRAWING

SYMBOL KEY	
XXXX	PART NUMBER
XX	NOZZLE
XX/X	NOZZLE
X	REVISION
XXX	ASSEMBLY DETAIL
XX	NOTES

CONFIDENTIAL

THE INFORMATION CONTAINED HEREIN IS PROPRIETARY INFORMATION AND SHALL NOT BE COPIED AND/OR REPRODUCED IN ANY MANNTER, NOR USED FOR ANY PURPOSE WHATSOEVER EXCEPT AS SPECIFICALLY PERMITTED PURSUANT TO WRITTEN AGREEMENT WITH UOP

CUSTOMER : CENOVUS ENERGY LIMA REFINERY
LOCATION : LIMA, OHIO, USA
ITEM NO. : DA-C-3001 TETRA EXTRACTOR
P.O. NO. : 8401698824

DIRECT INQUIRIES PERTAINING TO THIS DRAWING AND ASSOCIATED EQUIPMENT TO UOP TONAWANDA

TITLE:
TOWER ATTACHMENT
FEED 11A DISTRIBUTOR
SUPPORTS ABOVE TRAY 20

BY	DATE	SCALE
JAD	1/12/24	1:16
CHECKED DMW	1/24	NO. SHTS. 6
REVIEWED PJW	1/24	SHT.NO. 1
APPROVED JRU	2/1/24	3

LATEST REVISION:

Honeywell UOP
175 E. PARK DRIVE
TONAWANDA, NY 14151-0986

DWG. NO. D- 2293968

REV	ALTERATION	DATE	BY	CHK'D	REV'D	APPV'D
1	ISSUED CERTIFIED	2/23/24	JAD	DMW 2/24	PJW 2/24	JRU 2/23/24

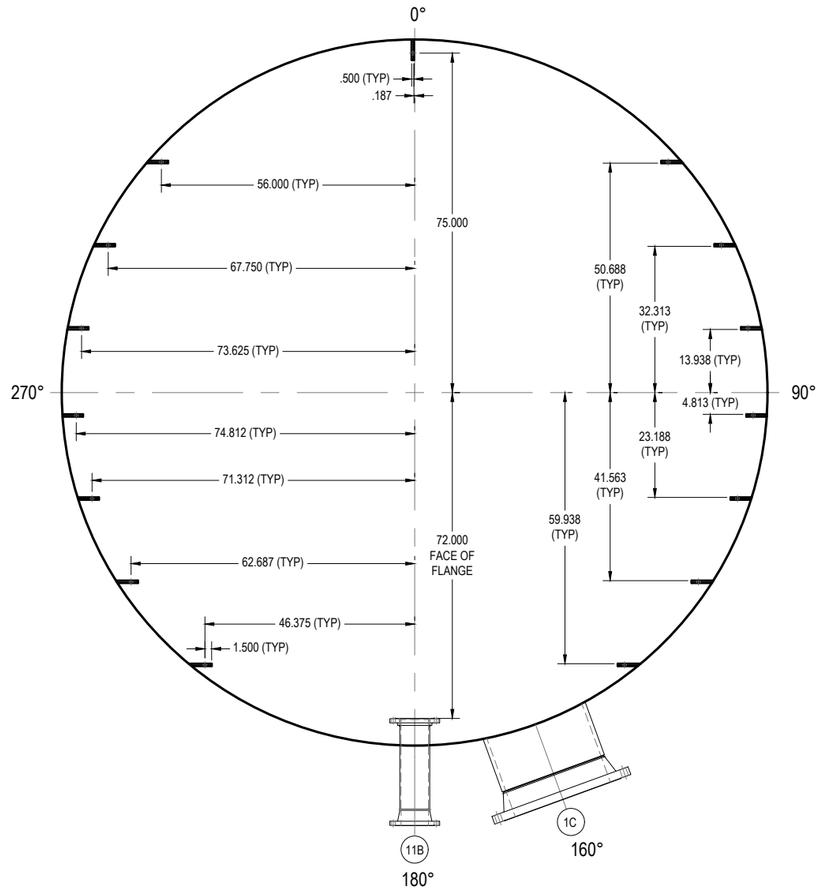

PLAN VIEW OF FEED 11B DISTRIBUTOR
SUPPORTS ABOVE TRAY 15 (1)

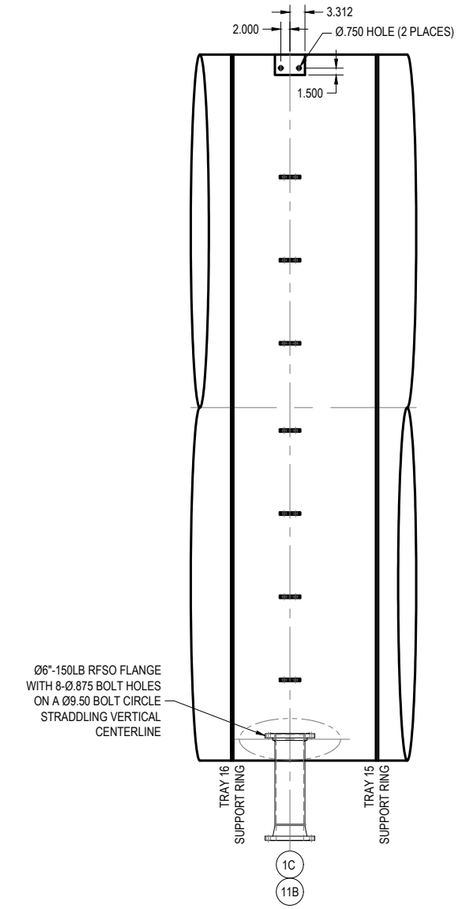

ELEVATION VIEW

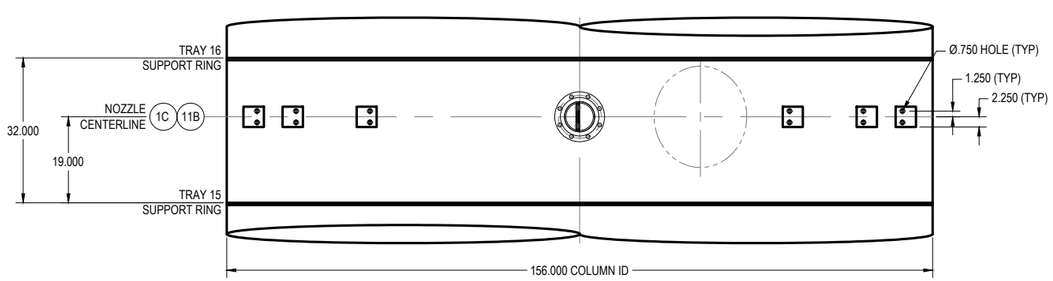

ELEVATION VIEW

(1) ALL EXISTING PIPE SUPPORTS TO BE REUSED

uop CERTIFIED DRAWING

SYMBOL KEY	
XXXX	PART NUMBER
XX	NOZZLE
XX/X	NOZZLE
X	REVISION
XXX	ASSEMBLY DETAIL
XX	NOTES

CONFIDENTIAL

THE INFORMATION CONTAINED HEREIN IS PROPRIETARY INFORMATION AND SHALL NOT BE COPIED AND/OR REPRODUCED IN ANY MANNTER, NOR USED FOR ANY PURPOSE WHATSOEVER EXCEPT AS SPECIFICALLY PERMITTED PURSUANT TO WRITTEN AGREEMENT WITH UOP

CUSTOMER : CENOVUS ENERGY LIMA REFINERY
LOCATION : LIMA, OHIO, USA
ITEM NO. : DA-C-3001 TETRA EXTRACTOR
P.O. NO. : 8401698824

DIRECT INQUIRIES PERTAINING TO THIS DRAWING AND ASSOCIATED EQUIPMENT TO UOP TONAWANDA

TITLE:
TOWER ATTACHMENT
FEED 11B DISTRIBUTOR
SUPPORTS ABOVE TRAY 15

BY	DATE	SCALE
JAD	1/12/24	1:16
CHECKED DMW	1/24	NO. SHTS. 6
REVIEWED PJW	1/24	SHT.NO. 4
APPROVED JRU	2/1/24	LATEST REVISION: 1

Honeywell UOP
175 E. PARK DRIVE
TONAWANDA, NY 14151-0986

DWG. NO. D- 2293968

REV	ALTERATION	DATE	BY	CHK'D	REV'D	APPV'D
1	ISSUED CERTIFIED	2/23/24	JAD	DMW 2/24	PJW 2/24	JRU 2/23/24

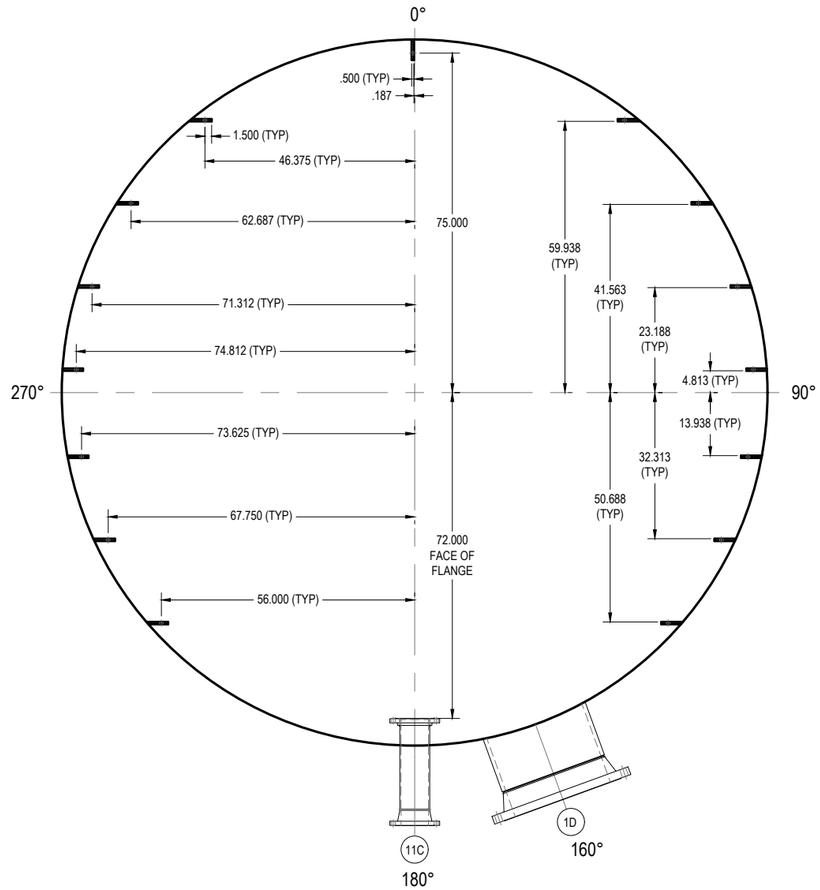

PLAN VIEW OF FEED 11C DISTRIBUTOR
SUPPORTS ABOVE TRAY 10 (1)

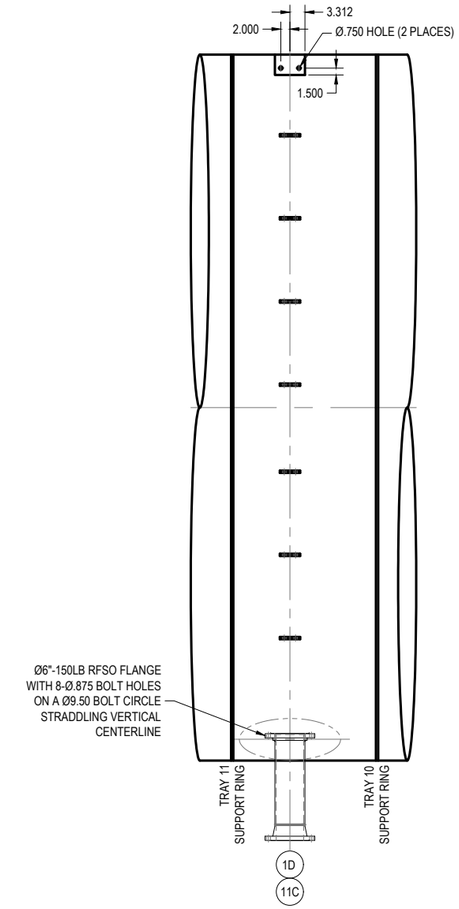

ELEVATION VIEW

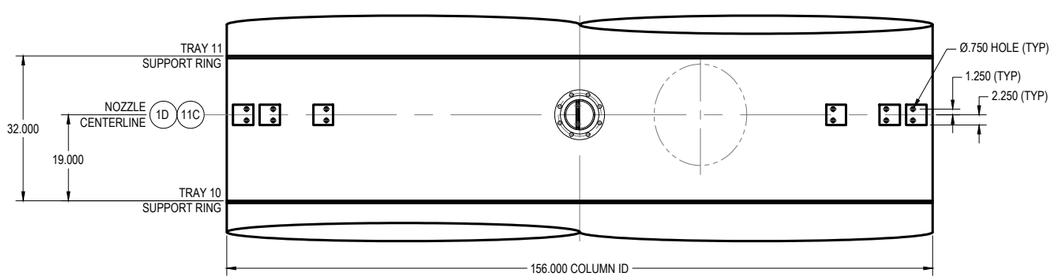

ELEVATION VIEW

(1) ALL EXISTING PIPE SUPPORTS TO BE REUSED

uop CERTIFIED DRAWING

SYMBOL KEY	
XXXX	PART NUMBER
XX	NOZZLE
XX/X	NOZZLE
X	REVISION
XXX	ASSEMBLY DETAIL
XX	NOTES

CONFIDENTIAL

THE INFORMATION CONTAINED HEREIN IS PROPRIETARY INFORMATION AND SHALL NOT BE COPIED AND/OR REPRODUCED IN ANY MANNTER, NOR USED FOR ANY PURPOSE WHATSOEVER EXCEPT AS SPECIFICALLY PERMITTED PURSUANT TO WRITTEN AGREEMENT WITH UOP

CUSTOMER : CENOVUS ENERGY LIMA REFINERY
LOCATION : LIMA, OHIO, USA
ITEM NO. : DA-C-3001 TETRA EXTRACTOR
P.O. NO. : 8401698824

DIRECT INQUIRIES PERTAINING TO THIS DRAWING AND ASSOCIATED EQUIPMENT TO UOP TONAWANDA

TITLE:
TOWER ATTACHMENT
FEED 11C DISTRIBUTOR
SUPPORTS ABOVE TRAY 10

BY	DATE	SCALE
JAD	1/12/24	1:16
CHECKED DMW	1/24	NO. SHTS. 6
REVIEWED PJW	1/24	SHT.NO. 5
APPROVED JRU	2/1/24	LATEST REVISION: 1

Honeywell UOP
175 E. PARK DRIVE
TONAWANDA, NY 14151-0986

DWG. NO. D- 2293968

REV	ALTERATION	DATE	BY	CHK'D	REV'D	APPV'D
1	ISSUED CERTIFIED	2/23/24	JAD	DMW 2/24	PJW 2/24	JRU 2/23/24

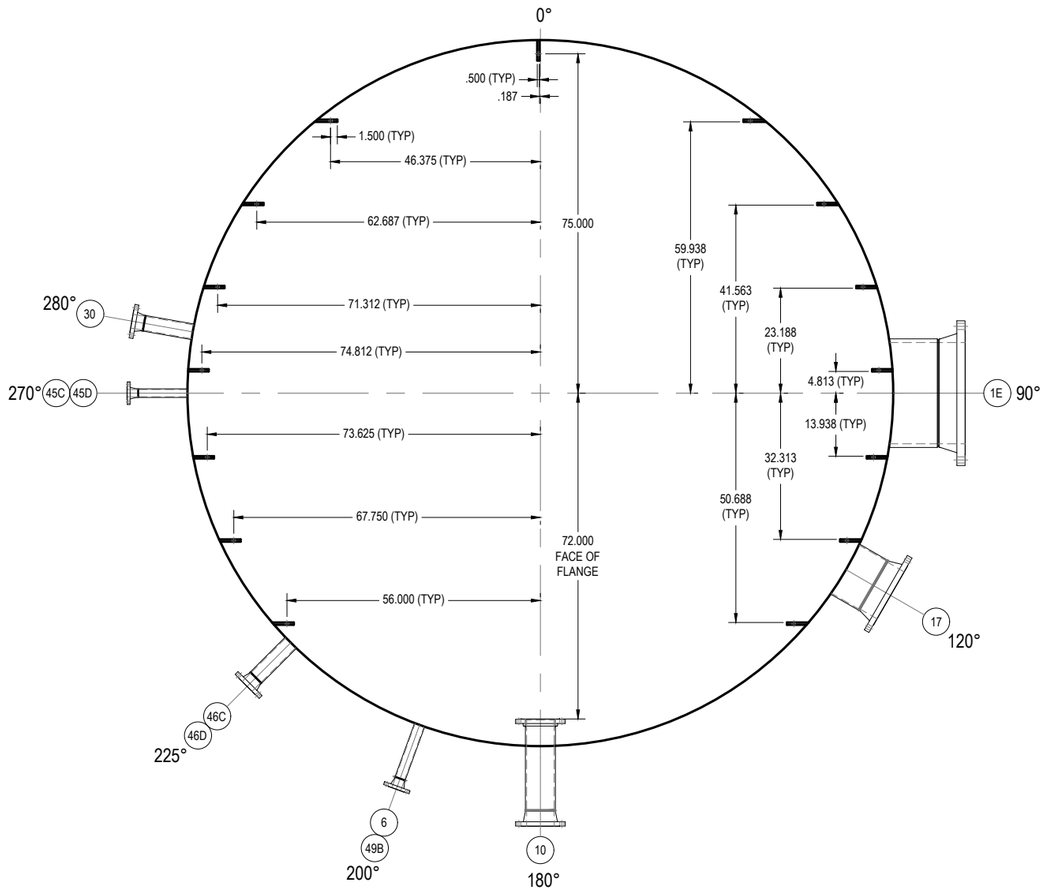

PLAN VIEW OF REFLUX 10 DISTRIBUTOR SUPPORTS BELOW TRAY 1 (1)

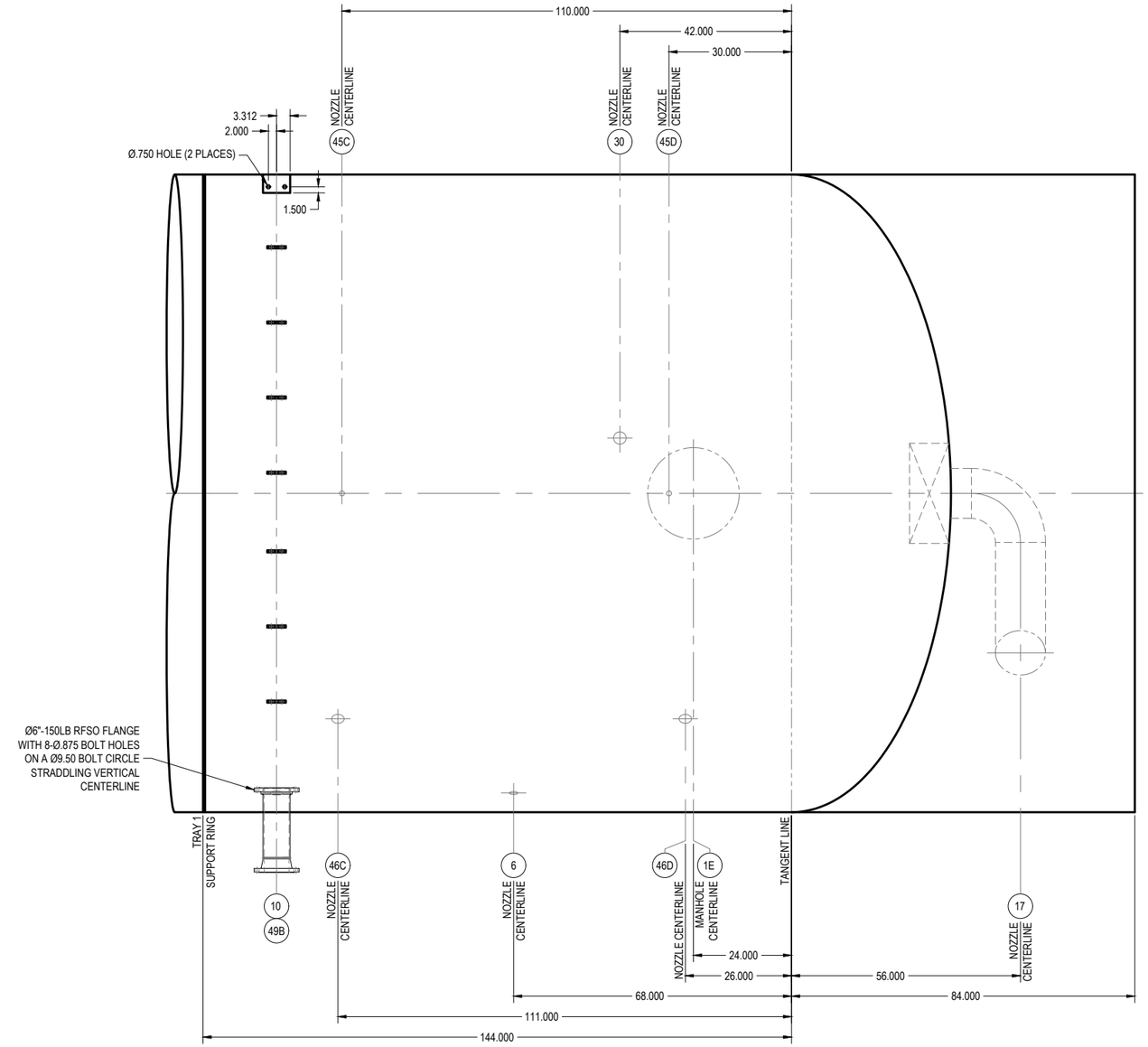

ELEVATION VIEW

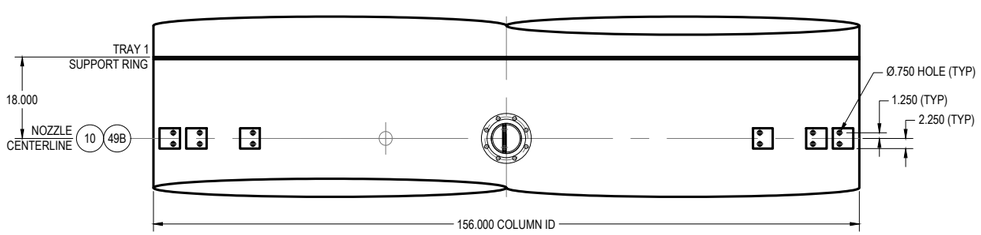

ELEVATION VIEW

(1) ALL EXISTING PIPE SUPPORTS TO BE REUSED

UOP CERTIFIED DRAWING

SYMBOL KEY	
XXXX	PART NUMBER
XX	NOZZLE
XX/X	NOZZLE
X	REVISION
XXX	ASSEMBLY DETAIL
XX	NOTES

CONFIDENTIAL

THE INFORMATION CONTAINED HEREIN IS PROPRIETARY INFORMATION AND SHALL NOT BE COPIED AND/OR REPRODUCED IN ANY MANNTER, NOR USED FOR ANY PURPOSE WHATSOEVER EXCEPT AS SPECIFICALLY PERMITTED PURSUANT TO WRITTEN AGREEMENT WITH UOP

CUSTOMER : CENOVUS ENERGY LIMA REFINERY
LOCATION : LIMA, OHIO, USA
ITEM NO. : DA-C-3001 TETRA EXTRACTOR
P.O. NO. : 8401698824

DIRECT INQUIRIES PERTAINING TO THIS DRAWING AND ASSOCIATED EQUIPMENT TO UOP TONAWANDA

TITLE:
TOWER ATTACHMENT
REFLUX 10 DISTRIBUTOR
SUPPORTS BELOW TRAY 1

BY	DATE	SCALE
JAD	1/12/24	1:16
CHECKED DMW	1/24	NO. SHTS. 6
REVIEWED PJW	1/24	SHT.NO. 6
APPROVED JRU	2/1/24	LATEST REVISION: 1

Honeywell UOP
175 E. PARK DRIVE
TONAWANDA, NY 14151-0986

DWG. NO. D- 2293968

REV	ALTERATION	DATE	BY	CHK'D	REV'D	APPV'D
1	ISSUED CERTIFIED	2/23/24	JAD	DMW 2/24	PJW 2/24	JRU 2/23/24

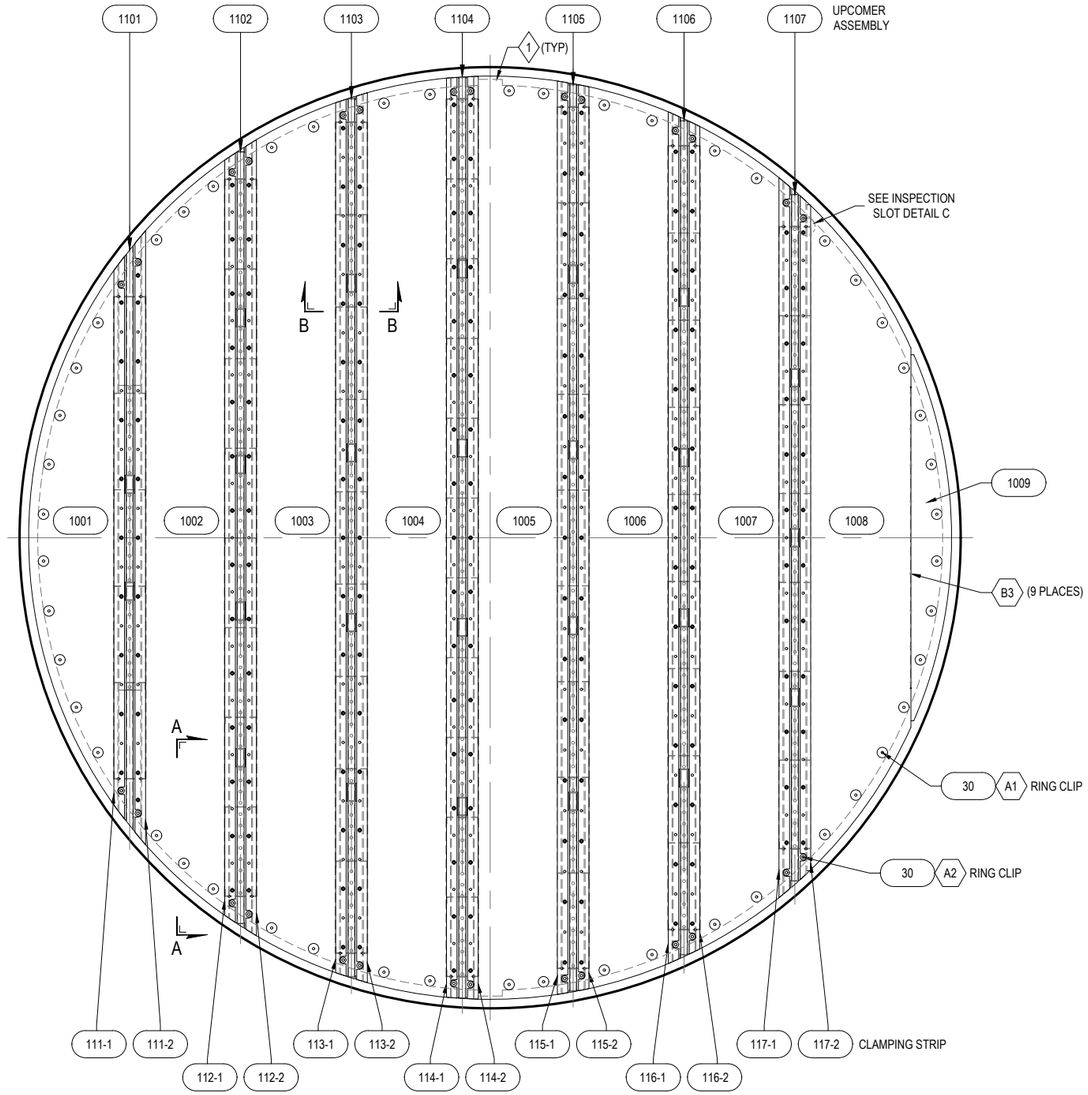

PLAN VIEW OF TRAY 60

FOR TRAY SPACING AND UPCOMER ORIENTATION
SEE DRAWING D-2293968

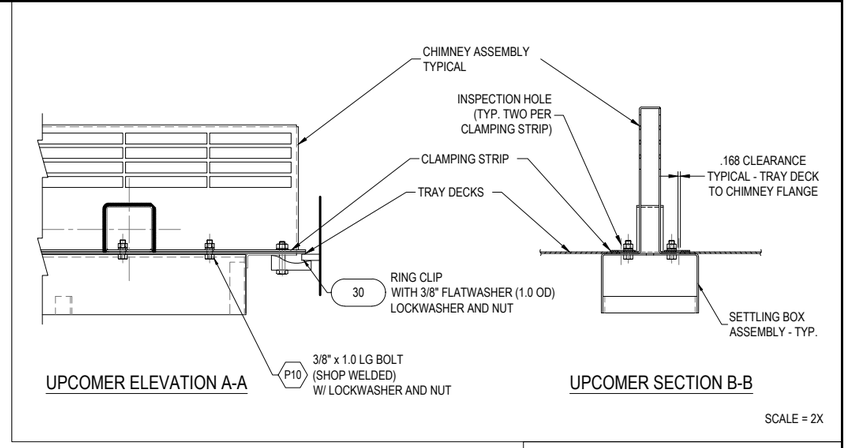

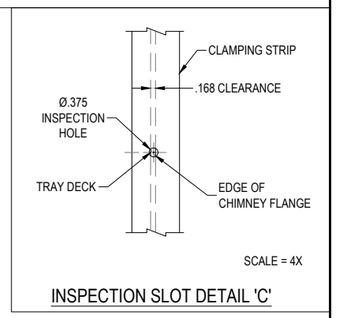

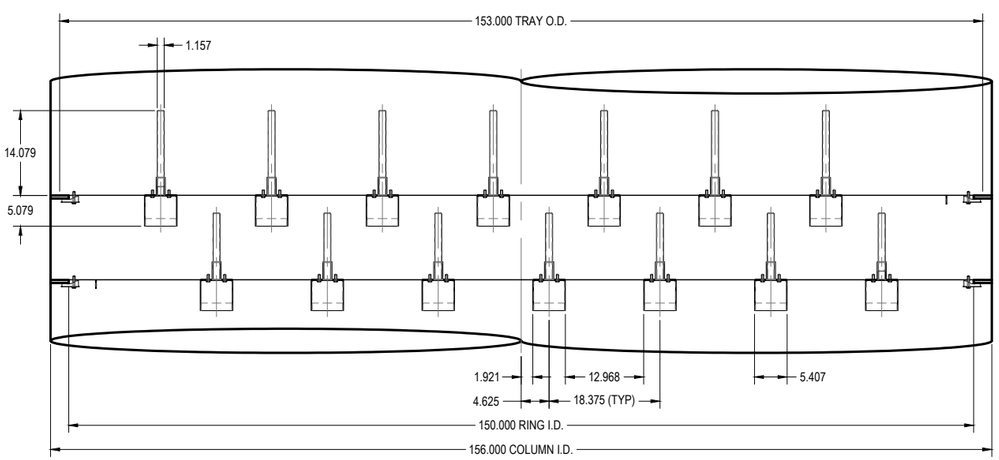

ELEVATION VIEW

SHEET INDEX

SHEET	DESCRIPTION
1	TRAY 60
2	TRAYS 6-11, 59
3	TRAYS 1-5, 46-58
4	TRAYS 31-45
5	TRAYS 24-30
6	TRAYS 22-23
7	TRAY 21
8	TRAYS 12-20
9	LEAN SOLVENT DISTRIBUTOR ABOVE TRAY 60
10	FEED 11A DISTRIBUTOR ABOVE TRAY 20
11	FEED 11B DISTRIBUTOR ABOVE TRAY 15
12	FEED 11C DISTRIBUTOR ABOVE TRAY 10
13	REFLUX 10 DISTRIBUTOR BELOW TRAY 1
14	ASSEMBLY DETAILS
15	PARTS LIST, MATERIALS AND GENERAL NOTES

1 TRAY DECK MUST COVER NOTCH IN SUPPORT RING IF NOTCH IS REQUIRED.

REV	ALTERATION	DATE	BY	CHK'D	REV'D	APPV'D
1	ISSUED CERTIFIED	2/23/24	JAD	DMW 2/24	PJW 2/24	JRU 2/23/24

UOP CERTIFIED DRAWING

SYMBOL KEY

- XXXX PART NUMBER
- XX NOZZLE
- XX/X NOZZLE
- X REVISION
- XXX ASSEMBLY DETAIL
- XX NOTES

CONFIDENTIAL

THE INFORMATION CONTAINED HEREIN IS PROPRIETARY INFORMATION AND SHALL NOT BE COPIED AND/OR REPRODUCED IN ANY MANNTER, NOR USED FOR ANY PURPOSE WHATSOEVER EXCEPT AS SPECIFICALLY PERMITTED PURSUANT TO WRITTEN AGREEMENT WITH UOP

CUSTOMER : CENOVUS ENERGY LIMA REFINERY
LOCATION : LIMA, OHIO, USA
ITEM NO. : DA-C-3001 TETRA EXTRACTOR
P.O. NO. : 8401698824

DIRECT INQUIRIES PERTAINING TO THIS DRAWING AND ASSOCIATED EQUIPMENT TO UOP TONAWANDA

TITLE: INSTALLATION TRAY 60

BY	DATE	SCALE
JAD	1/18/24	1:12
CHECKED DMW	1/24	NO. SHTS. 15
REVIEWED PJW	1/24	SHT.NO. 1
APPROVED JRU	2/1/24	LATEST REVISION: 1

Honeywell UOP
175 E. PARK DRIVE
TONAWANDA, NY 14151-0986

DWG. NO. D- 2293969

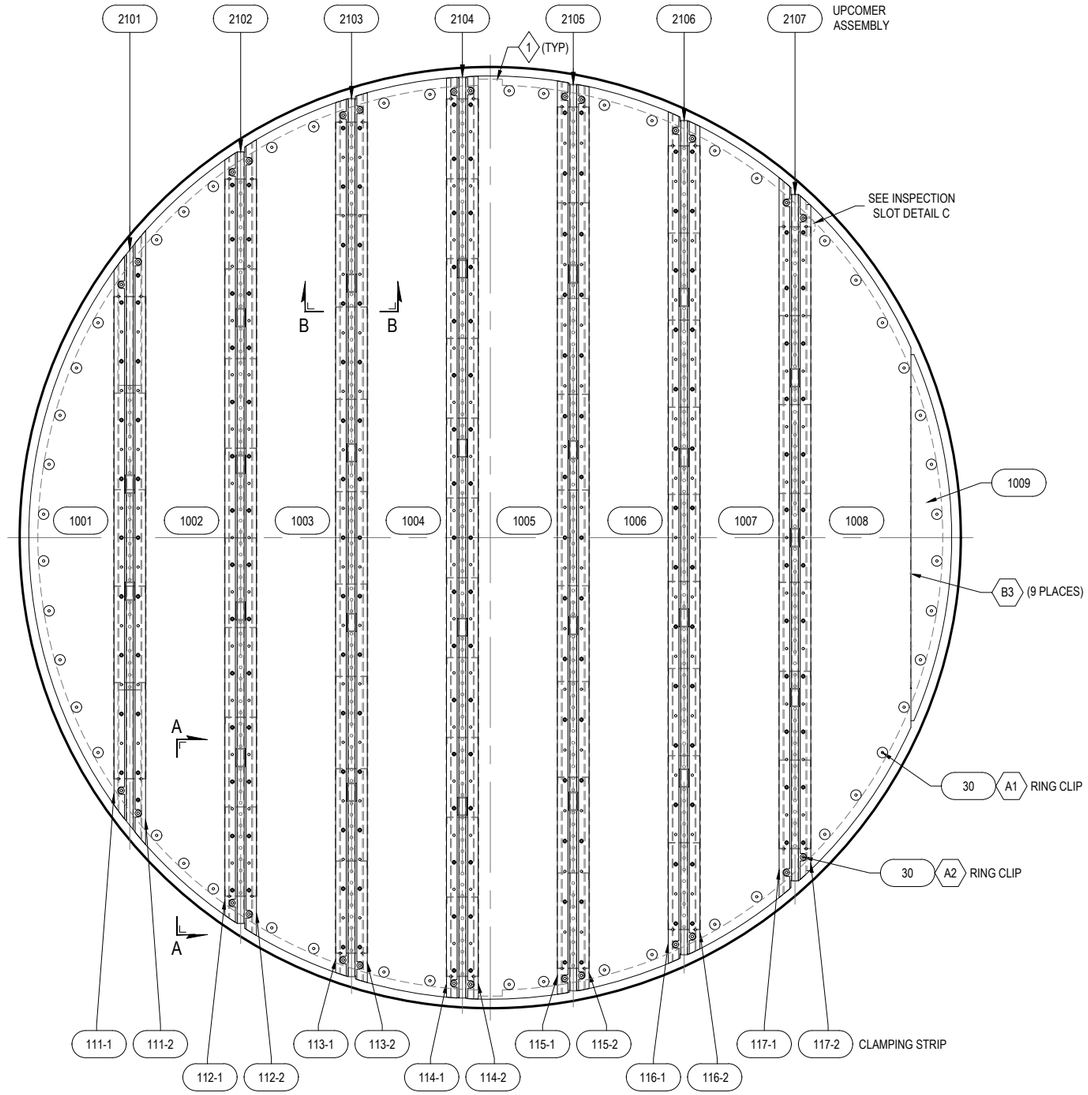

PLAN VIEW OF TRAYS 6-11, 59

FOR TRAY SPACING AND UPCOMER ORIENTATION
SEE DRAWING D-2293968

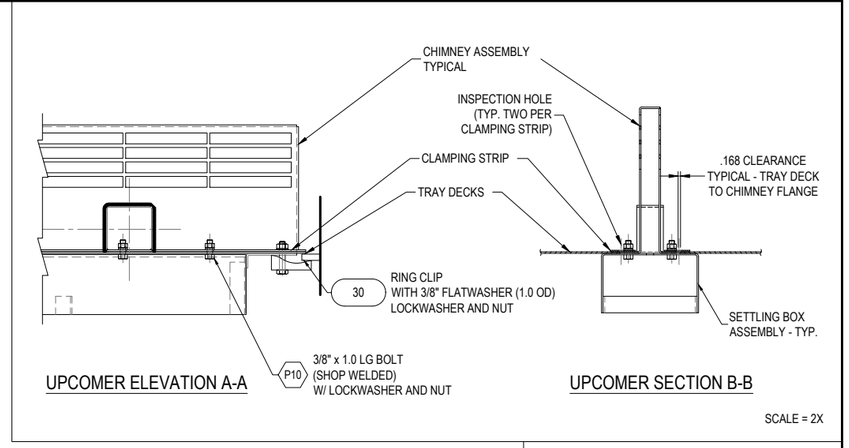

UPCOMER ELEVATION A-A

UPCOMER SECTION B-B

SCALE = 2X

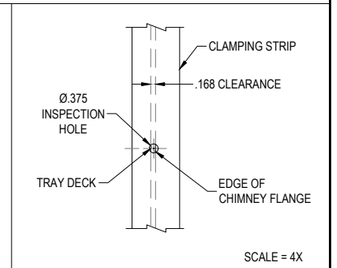

SCALE = 4X

INSPECTION SLOT DETAIL 'C'

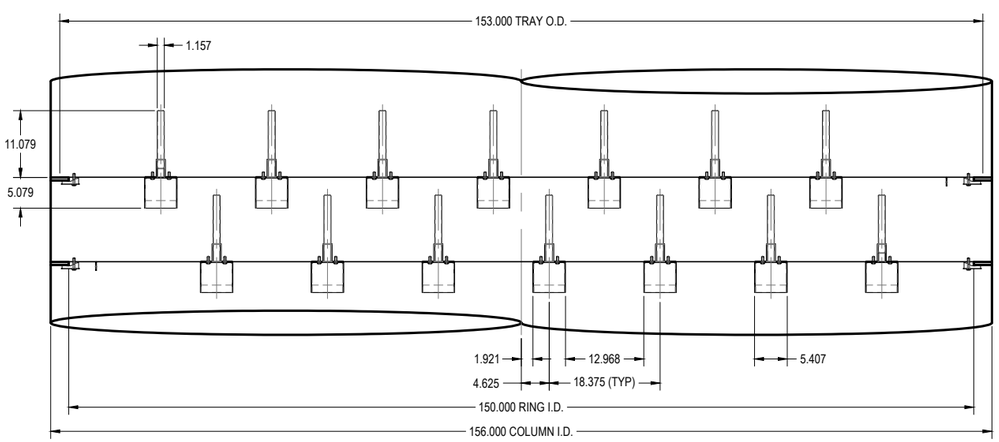

ELEVATION VIEW

1 TRAY DECK MUST COVER NOTCH IN SUPPORT RING IF NOTCH IS REQUIRED.

SYMBOL KEY

- XXXX PART NUMBER
- XX NOZZLE
- XX/X NOZZLE
- X REVISION
- XXX ASSEMBLY DETAIL
- XX NOTES

UOP CERTIFIED DRAWING

CONFIDENTIAL

THE INFORMATION CONTAINED HEREIN IS PROPRIETARY INFORMATION AND SHALL NOT BE COPIED AND/OR REPRODUCED IN ANY MANNTER, NOR USED FOR ANY PURPOSE WHATSOEVER EXCEPT AS SPECIFICALLY PERMITTED PURSUANT TO WRITTEN AGREEMENT WITH UOP

CUSTOMER : CENOVUS ENERGY LIMA REFINERY
LOCATION : LIMA, OHIO, USA
ITEM NO. : DA-C-3001 TETRA EXTRACTOR
P.O. NO. : 8401698824

TITLE: INSTALLATION TRAYS 6-11, 59

DIRECT INQUIRIES PERTAINING TO THIS DRAWING AND ASSOCIATED EQUIPMENT TO UOP TONAWANDA

BY	DATE	SCALE
JAD	1/18/24	1:12
CHECKED DMW	1/24	NO. SHTS. 15
REVIEWED PJW	1/24	SHT.NO. 2
APPROVED JRU	2/1/24	LATEST REVISION: 1

Honeywell UOP
175 E. PARK DRIVE
TONAWANDA, NY 14151-0986

DWG. NO. D- 2293969

REV	ALTERATION	DATE	BY	CHK'D	REV'D	APPV'D
1	ISSUED CERTIFIED	2/23/24	JAD	DMW 2/24	PJW 2/24	JRU 2/23/24

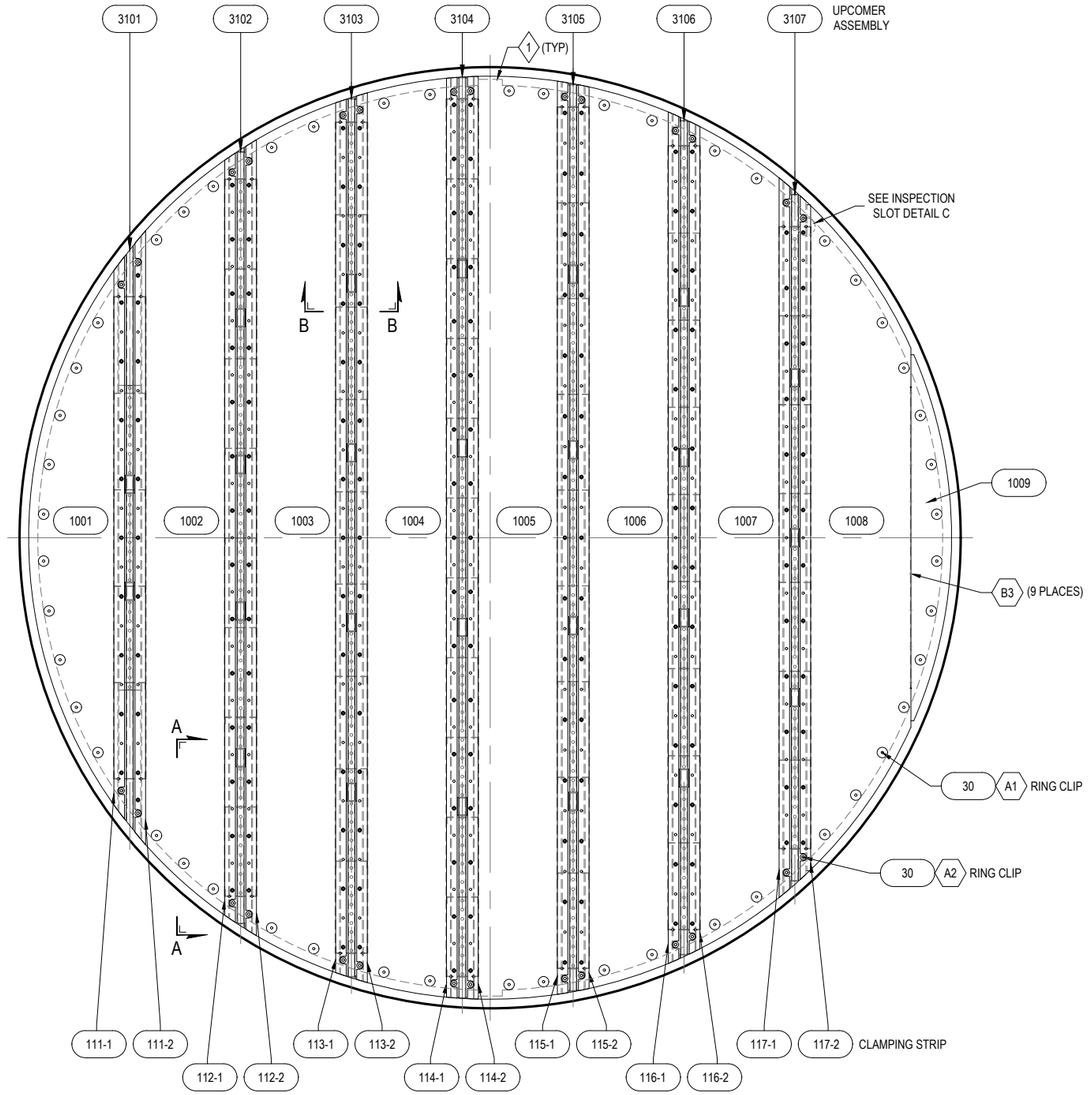

PLAN VIEW OF TRAYS 1-5, 46-58

FOR TRAY SPACING AND UPCOMER ORIENTATION
SEE DRAWING D-2293968

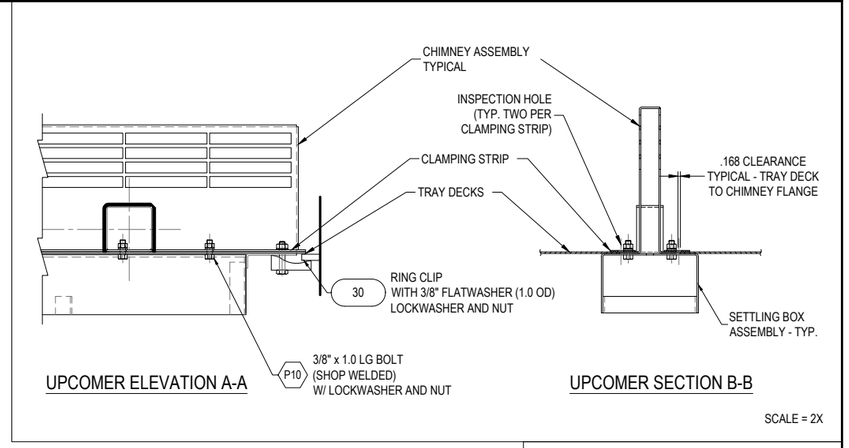

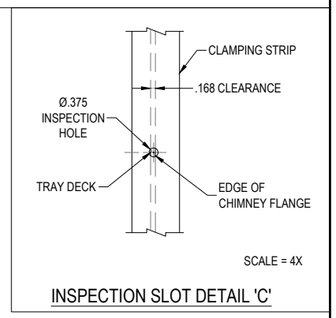

INSPECTION SLOT DETAIL 'C'

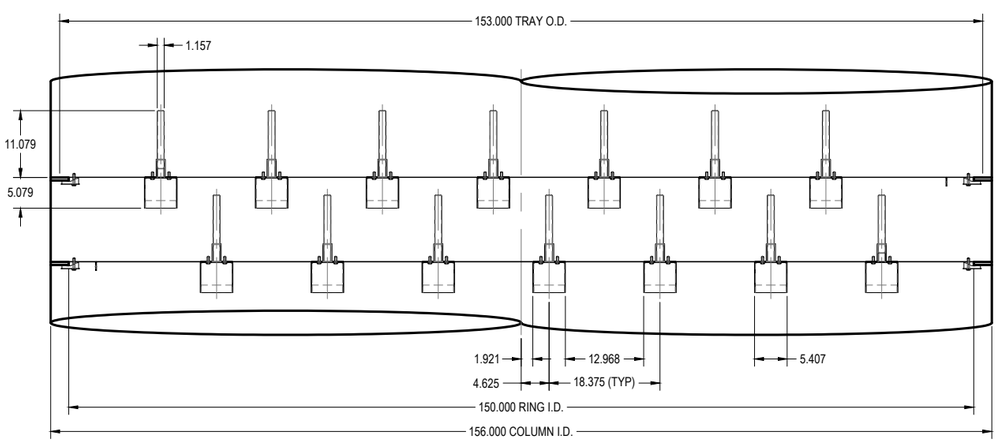

ELEVATION VIEW

1 TRAY DECK MUST COVER NOTCH IN SUPPORT RING IF NOTCH IS REQUIRED.

SYMBOL KEY

- XXXX PART NUMBER
- XX NOZZLE
- XX/X NOZZLE
- X REVISION
- XXX ASSEMBLY DETAIL
- XX NOTES

UOP CERTIFIED DRAWING

CONFIDENTIAL

THE INFORMATION CONTAINED HEREIN IS PROPRIETARY INFORMATION AND SHALL NOT BE COPIED AND/OR REPRODUCED IN ANY MANNTER, NOR USED FOR ANY PURPOSE WHATSOEVER EXCEPT AS SPECIFICALLY PERMITTED PURSUANT TO WRITTEN AGREEMENT WITH UOP

CUSTOMER : CENOVUS ENERGY LIMA REFINERY
LOCATION : LIMA, OHIO, USA
ITEM NO. : DA-C-3001 TETRA EXTRACTOR
P.O. NO. : 8401698824

DIRECT INQUIRIES PERTAINING TO THIS DRAWING AND ASSOCIATED EQUIPMENT TO UOP TONAWANDA

TITLE: INSTALLATION TRAYS 1-5, 46-58

REV	ALTERATION	DATE	BY	CHK'D	REV'D	APPV'D
1	ISSUED CERTIFIED	2/23/24	JAD	DMW 2/24	PJW 2/24	JRU 2/23/24

BY	DATE	SCALE
JAD	1/18/24	1:12
CHECKED DMW	1/24	NO. SHTS. 15
REVIEWED PJW	1/24	SHT.NO. 3
APPROVED JRU	2/1/24	LATEST REVISION: 1

Honeywell UOP
175 E. PARK DRIVE
TONAWANDA, NY 14151-0986

DWG. NO. D- 2293969

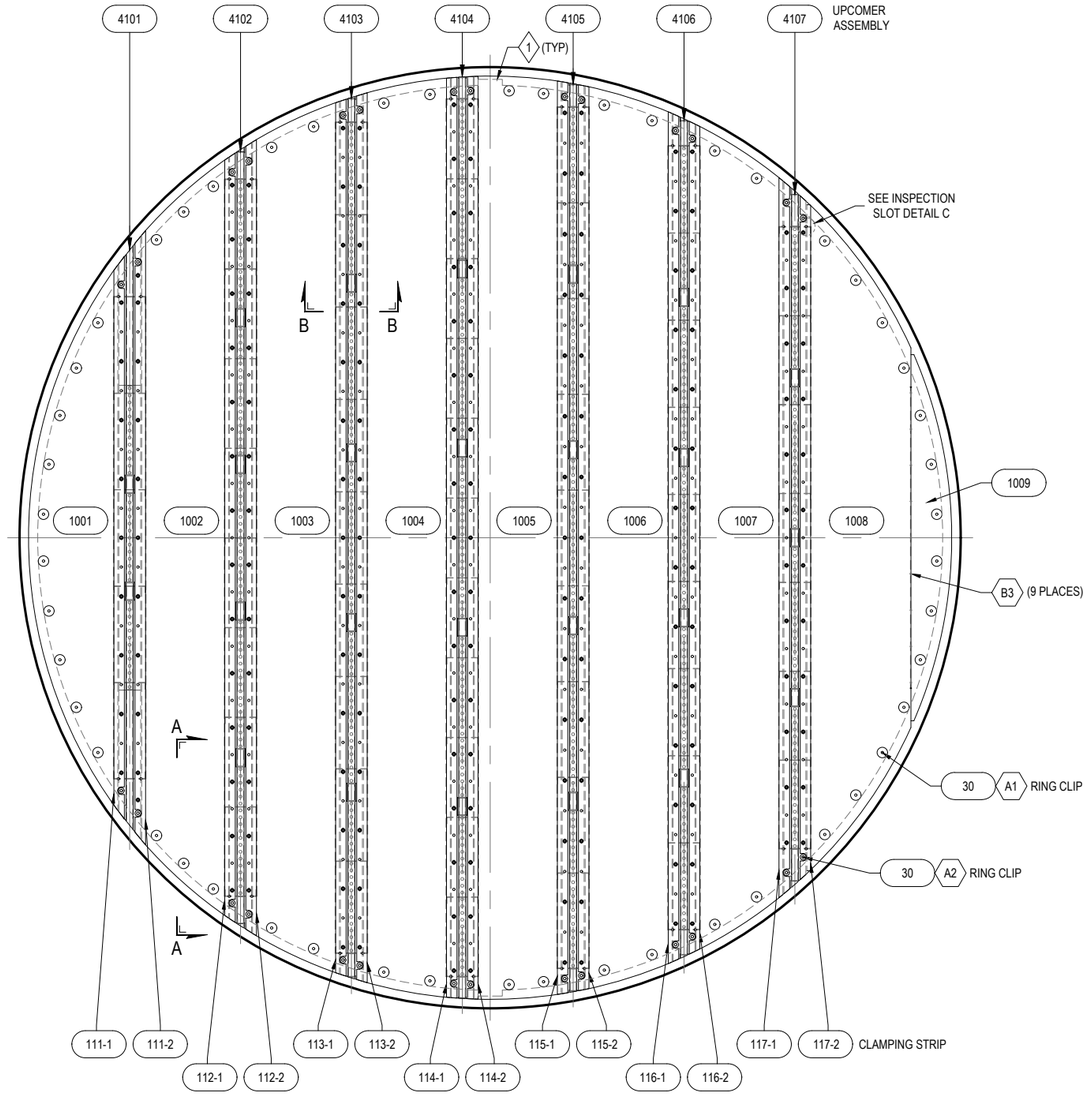

PLAN VIEW OF TRAYS 31-45

FOR TRAY SPACING AND UPCOMER ORIENTATION
SEE DRAWING D-2293968

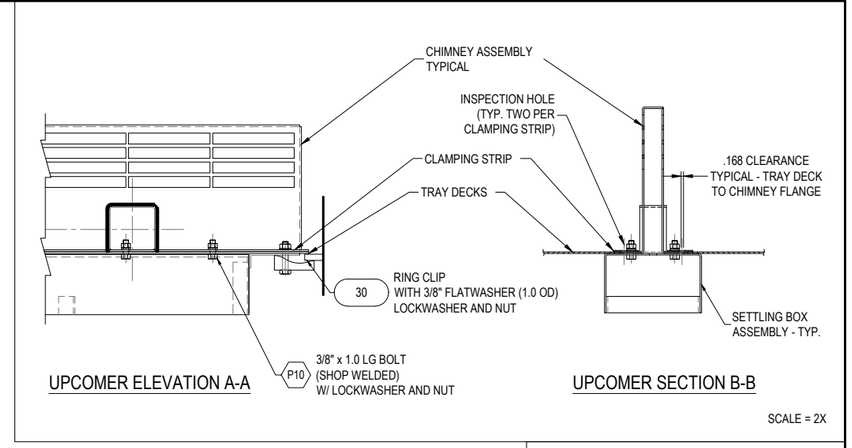

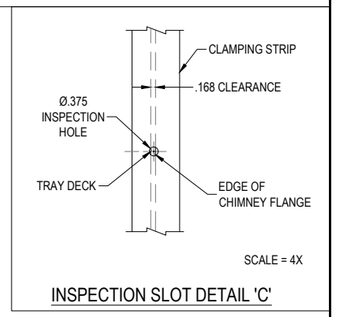

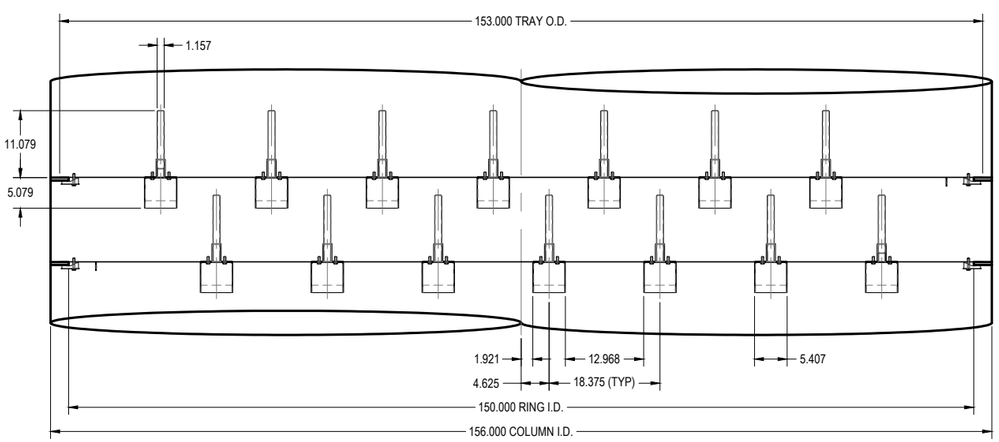

ELEVATION VIEW

1 TRAY DECK MUST COVER NOTCH IN SUPPORT RING IF NOTCH IS REQUIRED.

UOP CERTIFIED DRAWING

SYMBOL KEY	
XXXX	PART NUMBER
XX	NOZZLE
XX/X	NOZZLE
X	REVISION
XXX	ASSEMBLY DETAIL
XX	NOTES

CONFIDENTIAL

THE INFORMATION CONTAINED HEREIN IS PROPRIETARY INFORMATION AND SHALL NOT BE COPIED AND/OR REPRODUCED IN ANY MANNTER, NOR USED FOR ANY PURPOSE WHATSOEVER EXCEPT AS SPECIFICALLY PERMITTED PURSUANT TO WRITTEN AGREEMENT WITH UOP

CUSTOMER : CENOVUS ENERGY LIMA REFINERY
LOCATION : LIMA, OHIO, USA
ITEM NO. : DA-C-3001 TETRA EXTRACTOR
P.O. NO. : 8401698824

DIRECT INQUIRIES PERTAINING TO THIS DRAWING AND ASSOCIATED EQUIPMENT TO UOP TONAWANDA

TITLE: INSTALLATION TRAYS 31-45

BY	DATE	SCALE
JAD	1/18/24	1:12
CHECKED DMW	1/24	NO. SHTS. 15
REVIEWED PJW	1/24	LATEST REVISION: 1
APPROVED JRU	2/1/24	SHT.NO. 4

Honeywell UOP
175 E. PARK DRIVE
TONAWANDA, NY 14151-0986

DWG. NO. D- 2293969

REV	ALTERATION	DATE	BY	CHK'D	REV'D	APPV'D
1	ISSUED CERTIFIED	2/23/24	JAD	DMW 2/24	PJW 2/24	JRU 2/23/24

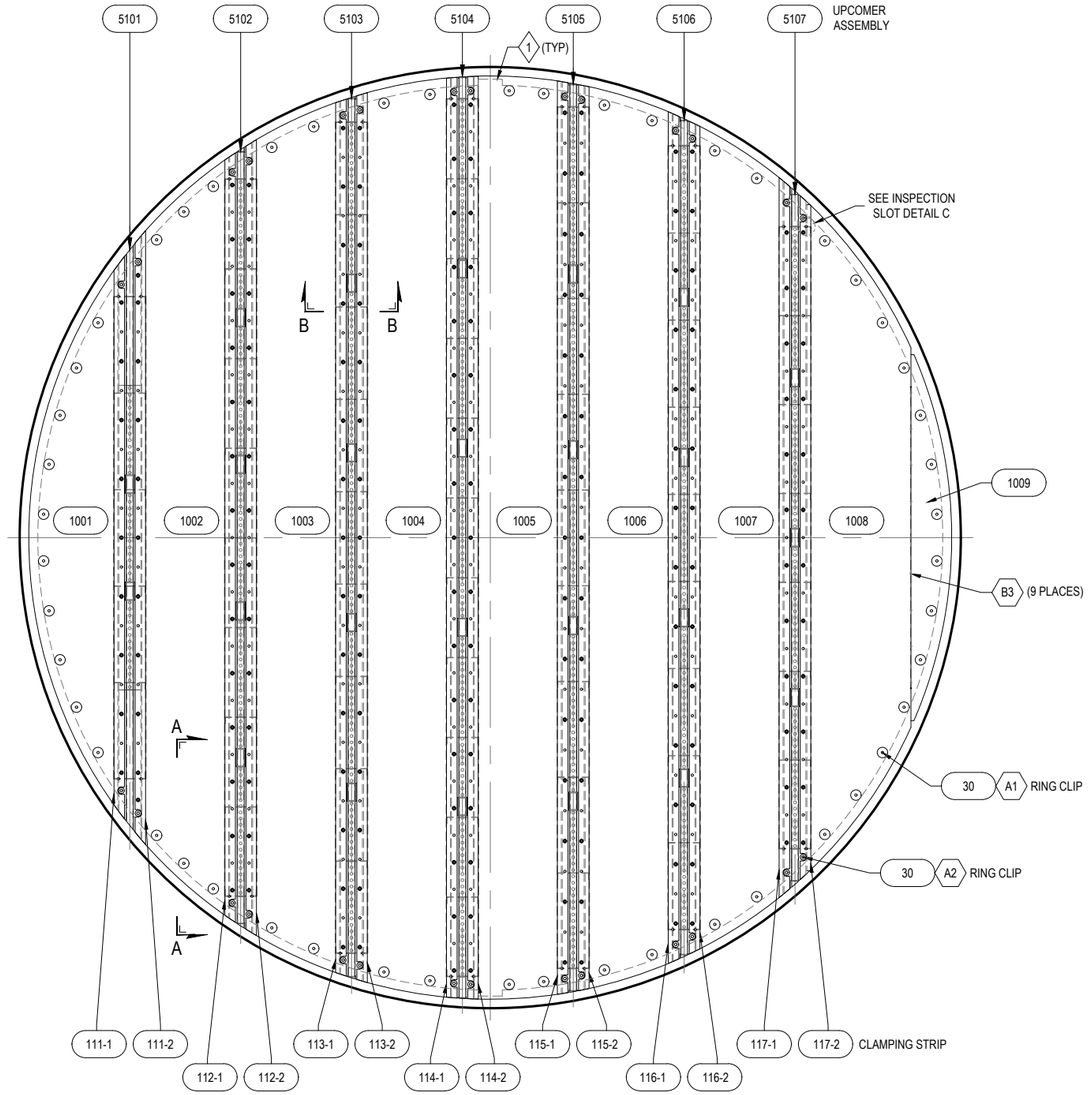

PLAN VIEW OF TRAYS 24-30

FOR TRAY SPACING AND UPCOMER ORIENTATION
SEE DRAWING D-2293968

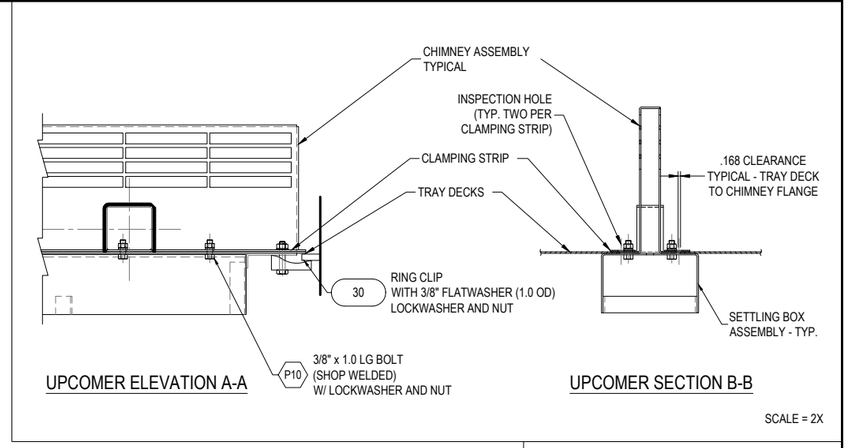

UPCOMER ELEVATION A-A

UPCOMER SECTION B-B

SCALE = 2X

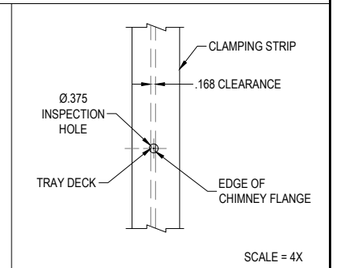

SCALE = 4X

INSPECTION SLOT DETAIL 'C'

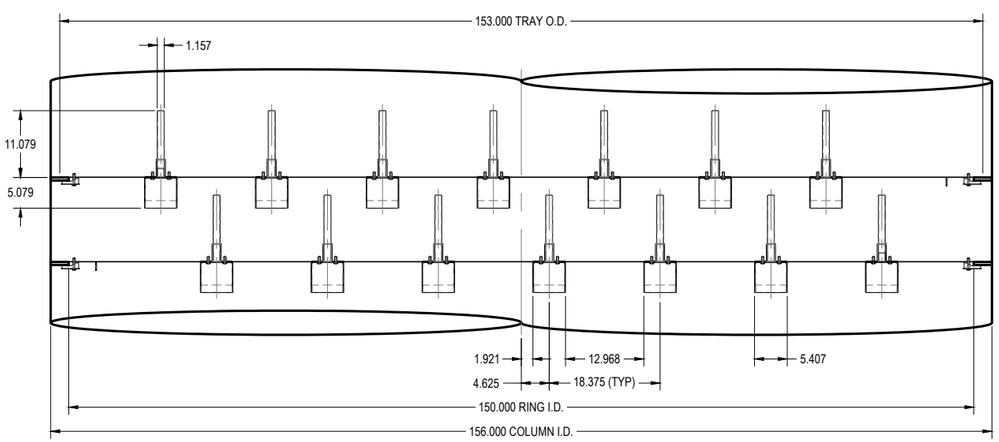

ELEVATION VIEW

1 TRAY DECK MUST COVER NOTCH IN SUPPORT RING IF NOTCH IS REQUIRED.

SYMBOL KEY

- XXXX PART NUMBER
- XX NOZZLE
- XX/X NOZZLE
- X REVISION
- XXX ASSEMBLY DETAIL
- XX NOTES

UOP CERTIFIED DRAWING

CONFIDENTIAL

THE INFORMATION CONTAINED HEREIN IS PROPRIETARY INFORMATION AND SHALL NOT BE COPIED AND/OR REPRODUCED IN ANY MANNTER, NOR USED FOR ANY PURPOSE WHATSOEVER EXCEPT AS SPECIFICALLY PERMITTED PURSUANT TO WRITTEN AGREEMENT WITH UOP

CUSTOMER : CENOVUS ENERGY LIMA REFINERY
LOCATION : LIMA, OHIO, USA
ITEM NO. : DA-C-3001 TETRA EXTRACTOR
P.O. NO. : 8401698824

TITLE: INSTALLATION TRAYS 24-30

DIRECT INQUIRIES PERTAINING TO THIS DRAWING AND ASSOCIATED EQUIPMENT TO UOP TONAWANDA

REV	ALTERATION	DATE	BY	CHK'D	REV'D	APPV'D
1	ISSUED CERTIFIED	2/23/24	JAD	DMW 2/24	PJW 2/24	JRU 2/23/24

BY	DATE	SCALE
JAD	1/18/24	1:12
CHECKED DMW	1/24	NO. SHTS. 15
REVIEWED PJW	1/24	SHT.NO. 5
APPROVED JRU	2/1/24	LATEST REVISION: 1

Honeywell UOP
175 E. PARK DRIVE
TONAWANDA, NY 14151-0986

DWG. NO. D- 2293969

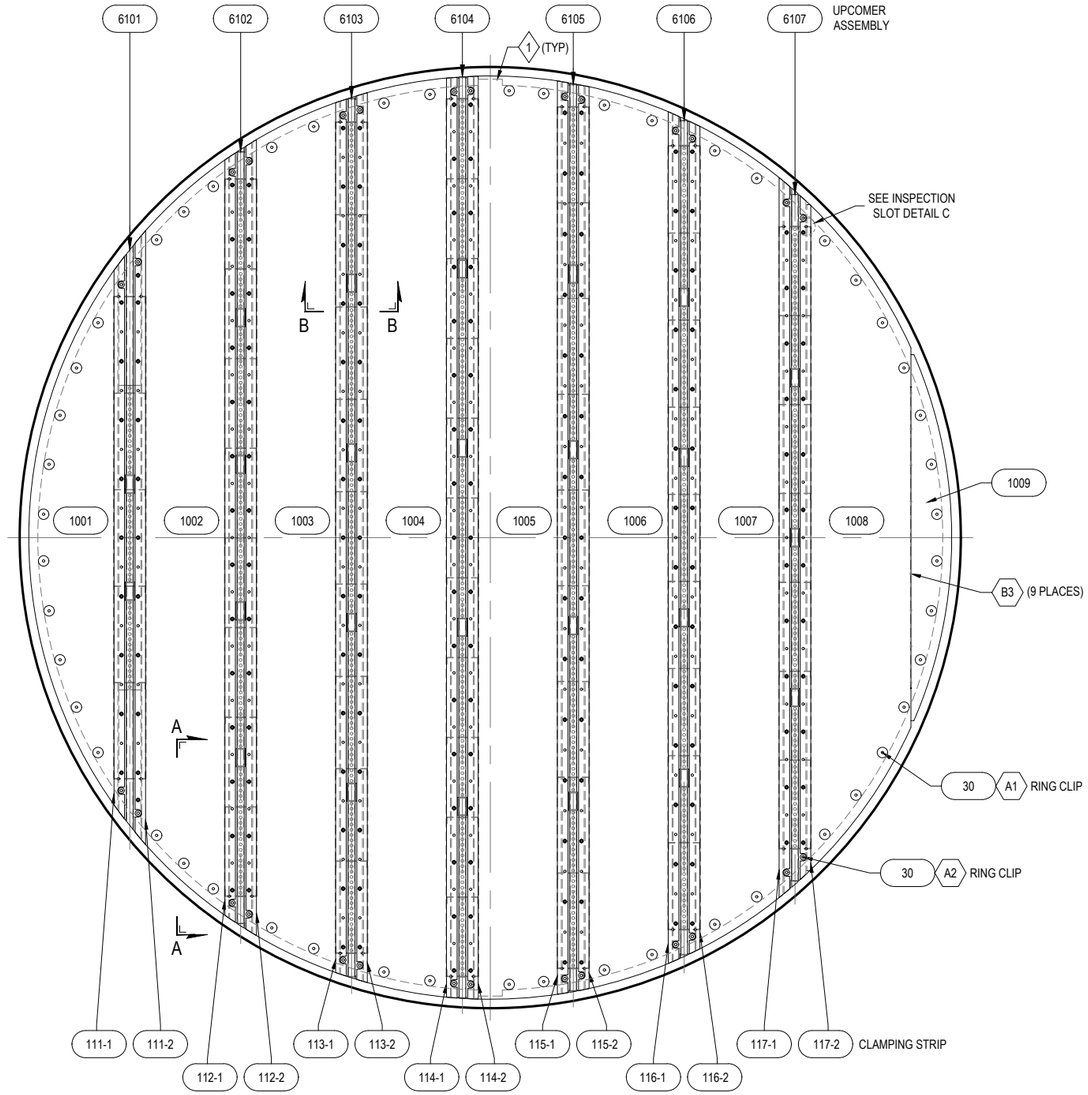

PLAN VIEW OF TRAYS 22-23

FOR TRAY SPACING AND UPCOMER ORIENTATION
SEE DRAWING D-2293968

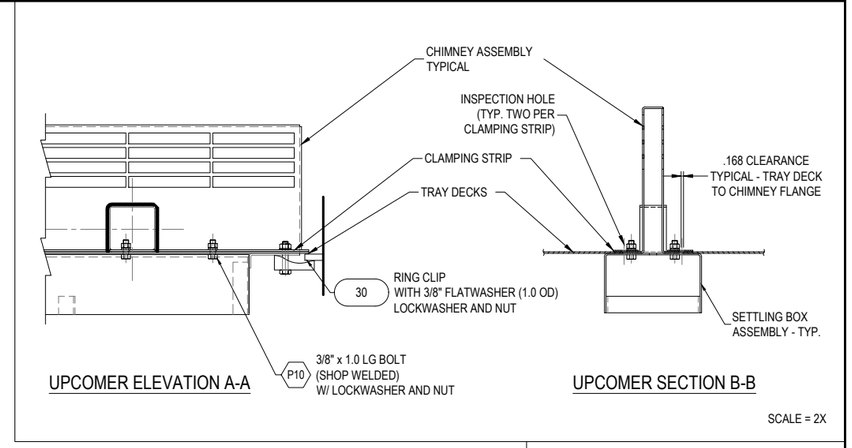

UPCOMER ELEVATION A-A

UPCOMER SECTION B-B

SCALE = 2X

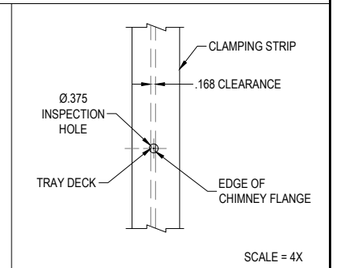

SCALE = 4X

INSPECTION SLOT DETAIL 'C'

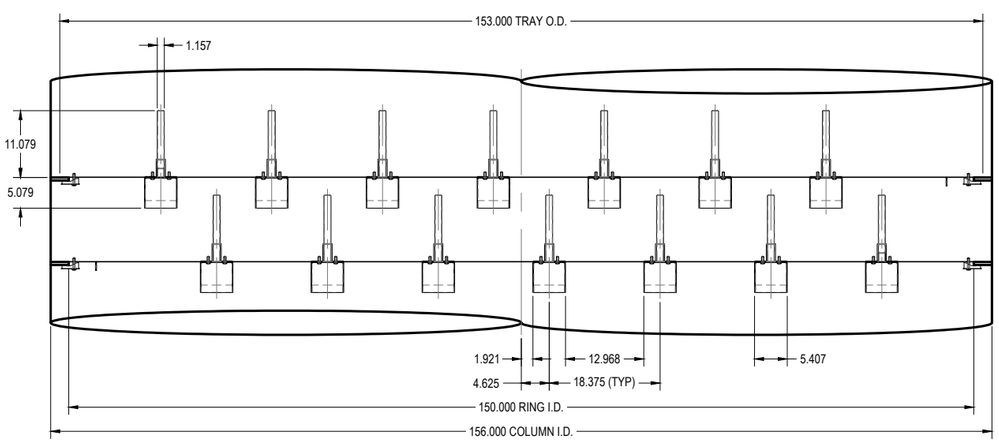

ELEVATION VIEW

1 TRAY DECK MUST COVER NOTCH IN SUPPORT RING IF NOTCH IS REQUIRED.

SYMBOL KEY

- XXXX PART NUMBER
- XX NOZZLE
- XX/X NOZZLE
- X REVISION
- XXX ASSEMBLY DETAIL
- XX NOTES

UOP CERTIFIED DRAWING

CONFIDENTIAL

THE INFORMATION CONTAINED HEREIN IS PROPRIETARY INFORMATION AND SHALL NOT BE COPIED AND/OR REPRODUCED IN ANY MANNTER, NOR USED FOR ANY PURPOSE WHATSOEVER EXCEPT AS SPECIFICALLY PERMITTED PURSUANT TO WRITTEN AGREEMENT WITH UOP

CUSTOMER : CENOVUS ENERGY LIMA REFINERY
LOCATION : LIMA, OHIO, USA
ITEM NO. : DA-C-3001 TETRA EXTRACTOR
P.O. NO. : 8401698824

DIRECT INQUIRIES PERTAINING TO THIS DRAWING AND ASSOCIATED EQUIPMENT TO UOP TONAWANDA

TITLE: INSTALLATION TRAYS 22-23

BY	DATE	SCALE
JAD	1/18/24	1:12
CHECKED DMW	1/24	NO. SHTS. 15
REVIEWED PJW	1/24	SHT.NO. 6
APPROVED JRU	2/1/24	LATEST REVISION: 1

Honeywell UOP
175 E. PARK DRIVE
TONAWANDA, NY 14151-0986

DWG. NO. D- 2293969

REV	ALTERATION	DATE	BY	CHK'D	REV'D	APPV'D
1	ISSUED CERTIFIED	2/23/24	JAD	DMW 2/24	PJW 2/24	JRU 2/23/24

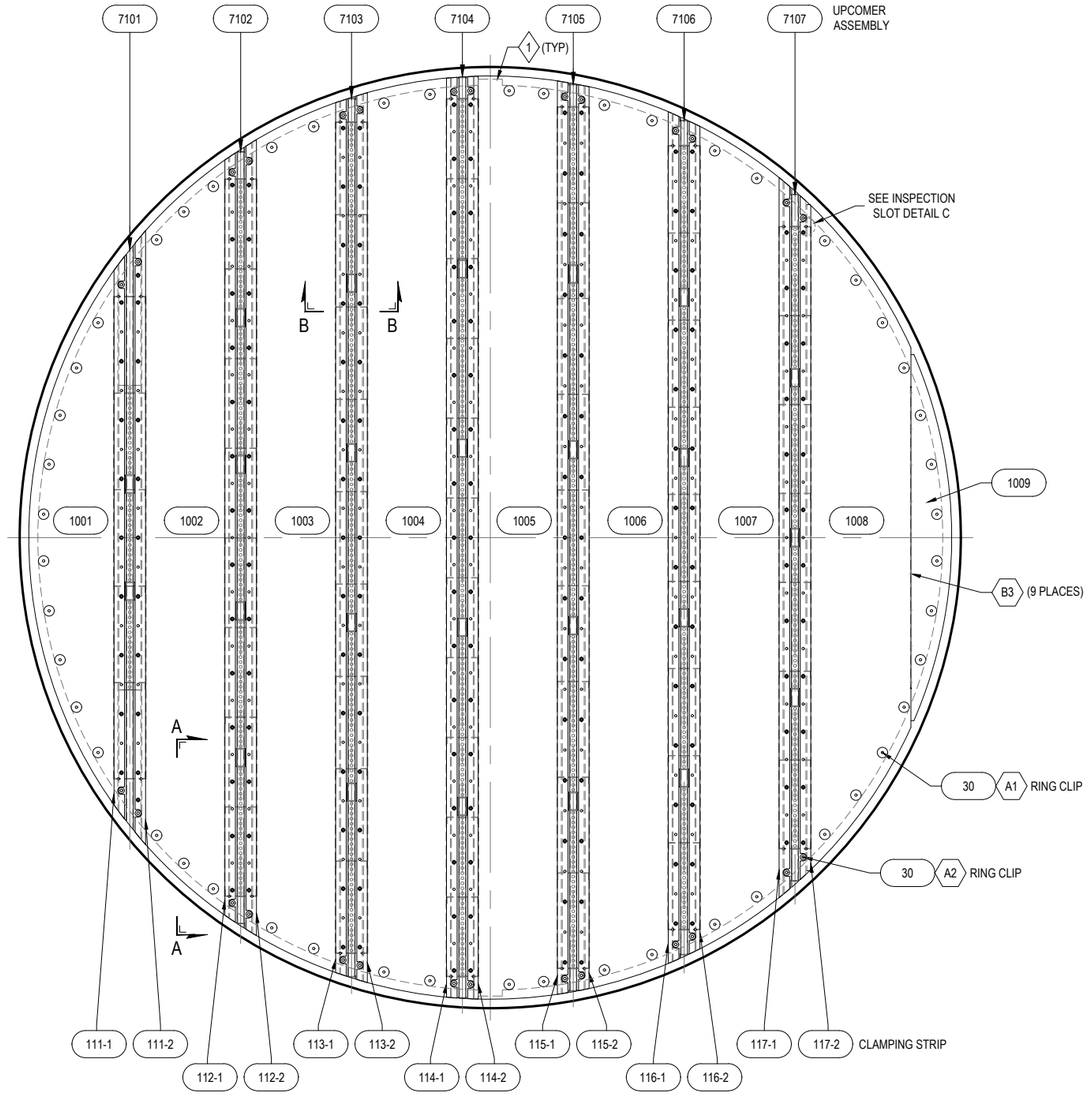

PLAN VIEW OF TRAY 21

FOR TRAY SPACING AND UPCOMER ORIENTATION
SEE DRAWING D-2293968

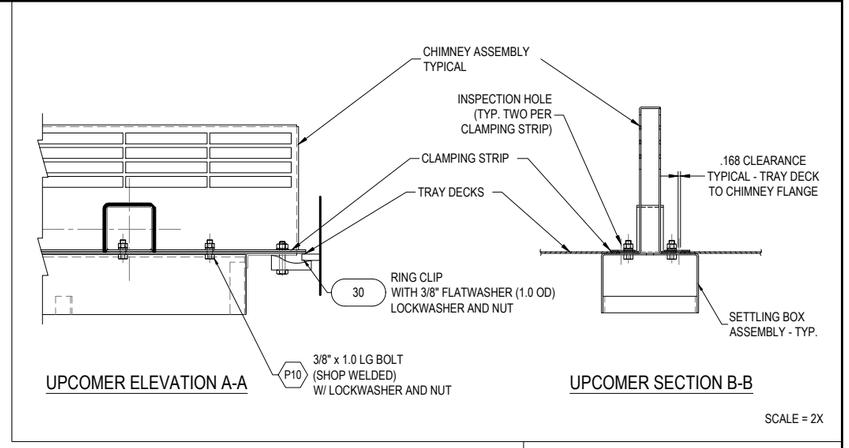

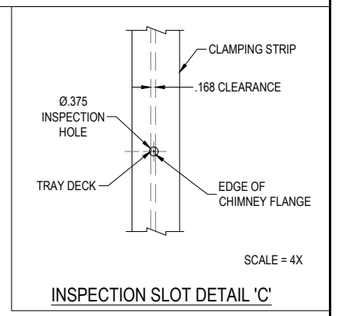

INSPECTION SLOT DETAIL 'C'

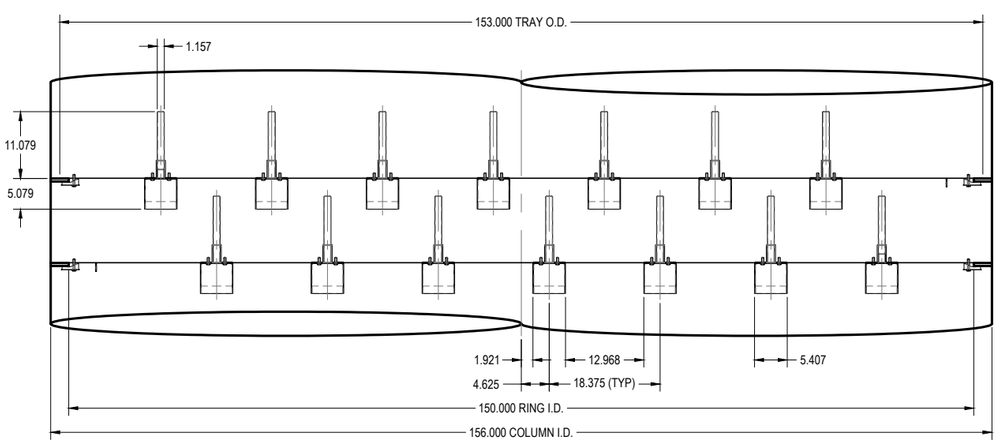

ELEVATION VIEW

1 TRAY DECK MUST COVER NOTCH IN SUPPORT RING IF NOTCH IS REQUIRED.

SYMBOL KEY

- XXXX PART NUMBER
- XX NOZZLE
- XX/X NOZZLE
- X REVISION
- XXX ASSEMBLY DETAIL
- XX NOTES

UOP CERTIFIED DRAWING

CONFIDENTIAL

THE INFORMATION CONTAINED HEREIN IS PROPRIETARY INFORMATION AND SHALL NOT BE COPIED AND/OR REPRODUCED IN ANY MANNTER, NOR USED FOR ANY PURPOSE WHATSOEVER EXCEPT AS SPECIFICALLY PERMITTED PURSUANT TO WRITTEN AGREEMENT WITH UOP

CUSTOMER : CENOVUS ENERGY LIMA REFINERY
LOCATION : LIMA, OHIO, USA
ITEM NO. : DA-C-3001 TETRA EXTRACTOR
P.O. NO. : 8401698824

DIRECT INQUIRIES PERTAINING TO THIS DRAWING AND ASSOCIATED EQUIPMENT TO UOP TONAWANDA

TITLE: INSTALLATION TRAY 21

BY	DATE	SCALE
JAD	1/18/24	1:12
CHECKED DMW	1/24	NO. SHTS. 15
REVIEWED PJW	1/24	SHT.NO. 7
APPROVED JRU	2/1/24	LATEST REVISION: 1

Honeywell UOP
175 E. PARK DRIVE
TONAWANDA, NY 14151-0986

DWG. NO. D- 2293969

REV	ALTERATION	DATE	BY	CHK'D	REV'D	APPV'D
1	ISSUED CERTIFIED	2/23/24	JAD	DMW 2/24	PJW 2/24	JRU 2/23/24

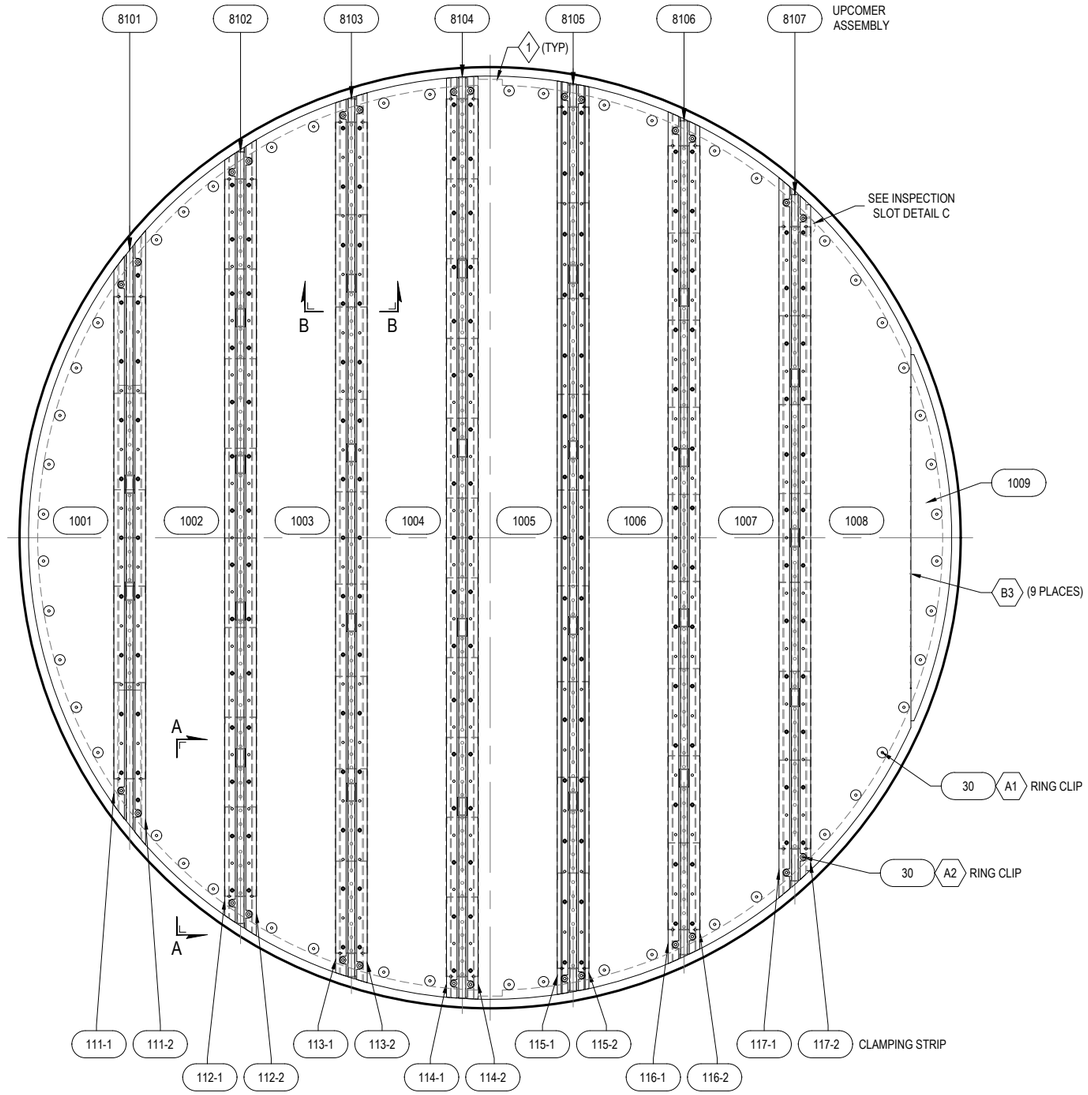

PLAN VIEW OF TRAYS 12-20

FOR TRAY SPACING AND UPCOMER ORIENTATION
SEE DRAWING D-2293968

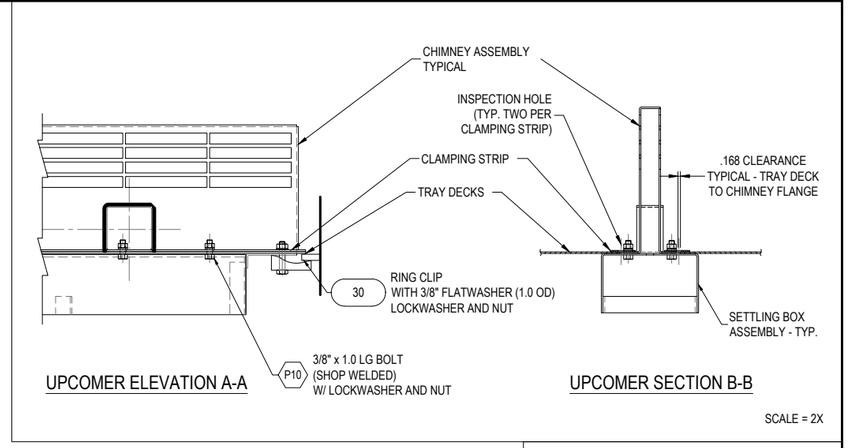

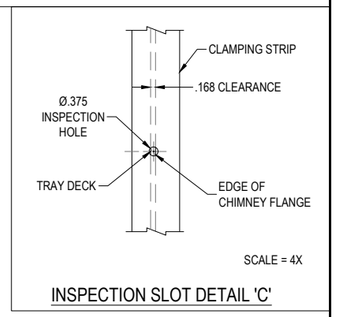

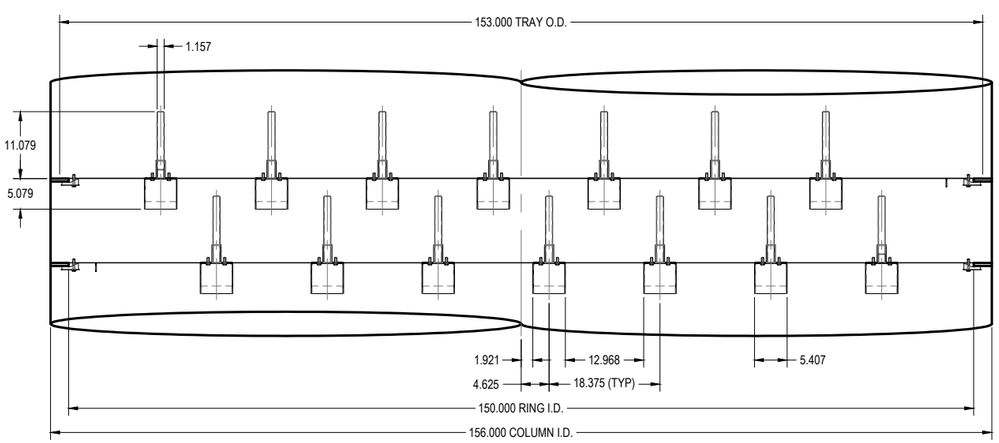

ELEVATION VIEW

1 TRAY DECK MUST COVER NOTCH IN SUPPORT RING IF NOTCH IS REQUIRED.

SYMBOL KEY	
XXXX	PART NUMBER
XX	NOZZLE
XX/X	NOZZLE
X	REVISION
XXX	ASSEMBLY DETAIL
XX	NOTES

REV	ALTERATION	DATE	BY	CHK'D	REV'D	APPV'D
1	ISSUED CERTIFIED	2/23/24	JAD	DMW 2/24	PJW 2/24	JRU 2/23/24

UOP CERTIFIED DRAWING

CONFIDENTIAL

THE INFORMATION CONTAINED HEREIN IS PROPRIETARY INFORMATION AND SHALL NOT BE COPIED AND/OR REPRODUCED IN ANY MANNTER, NOR USED FOR ANY PURPOSE WHATSOEVER EXCEPT AS SPECIFICALLY PERMITTED PURSUANT TO WRITTEN AGREEMENT WITH UOP

CUSTOMER : CENOVUS ENERGY LIMA REFINERY
LOCATION : LIMA, OHIO, USA
ITEM NO. : DA-C-3001 TETRA EXTRACTOR
P.O. NO. : 8401698824

DIRECT INQUIRIES PERTAINING TO THIS DRAWING AND ASSOCIATED EQUIPMENT TO UOP TONAWANDA

TITLE: INSTALLATION TRAYS 12-20

BY	DATE	SCALE
JAD	1/18/24	1:12
CHECKED DMW	1/24	NO. SHTS. 15
REVIEWED PJW	1/24	SHT.NO. 8
APPROVED JRU	2/1/24	LATEST REVISION: 1

Honeywell UOP
175 E. PARK DRIVE
TONAWANDA, NY 14151-0986

DWG. NO: D- 2293969

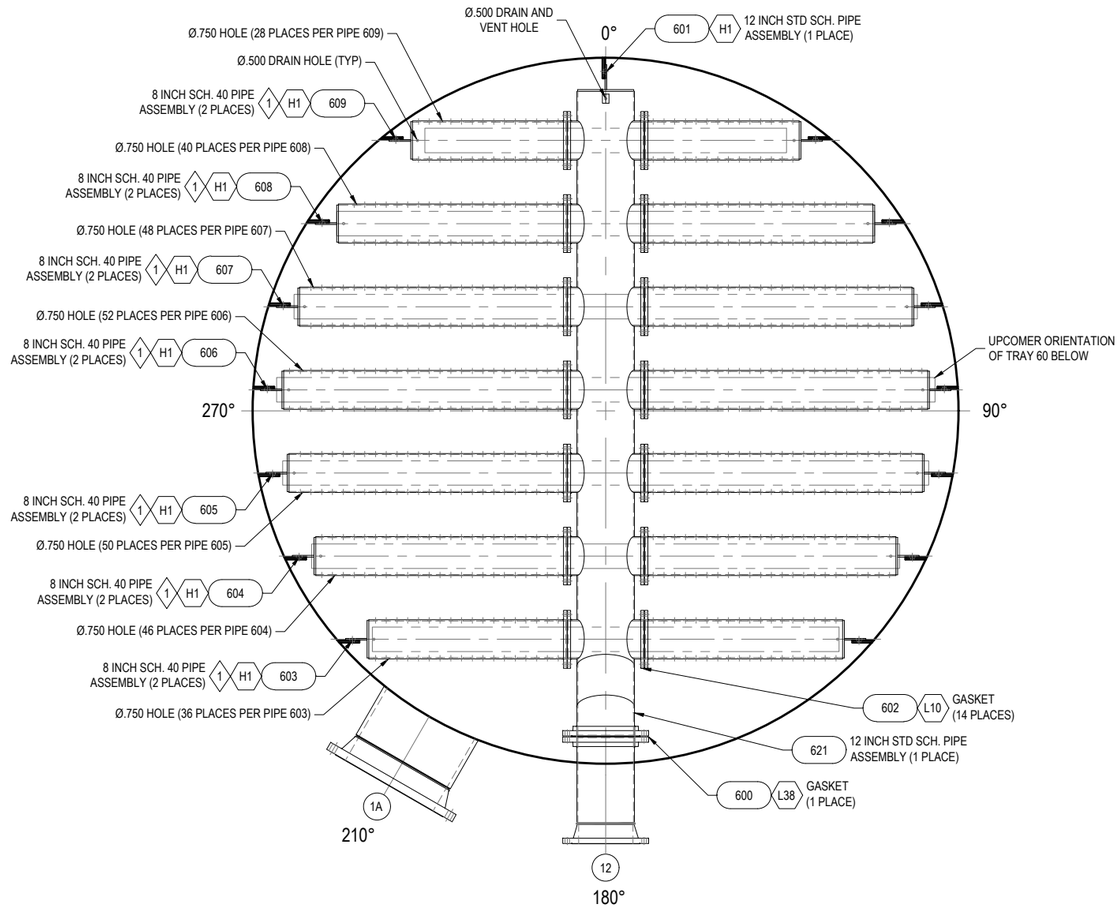

PLAN VIEW OF LEAN SOLVENT DISTRIBUTOR ABOVE TRAY 60

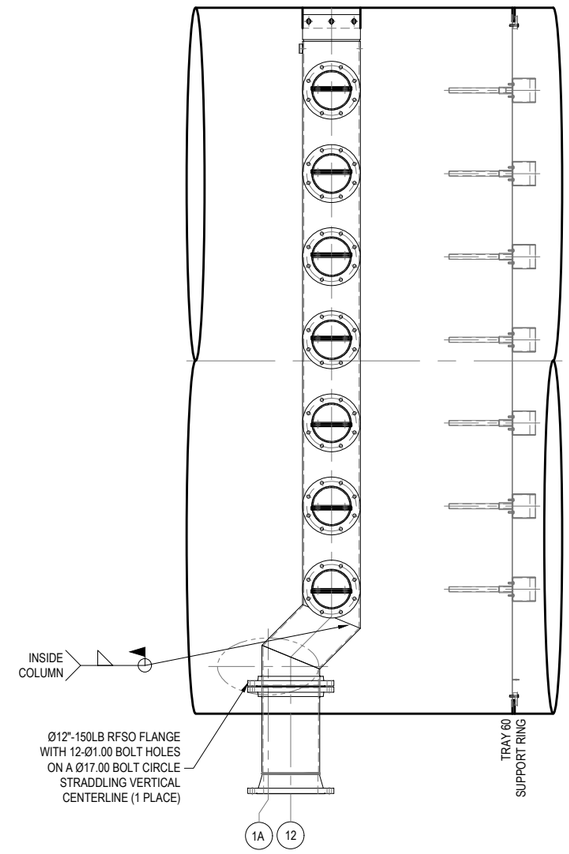

ELEVATION VIEW

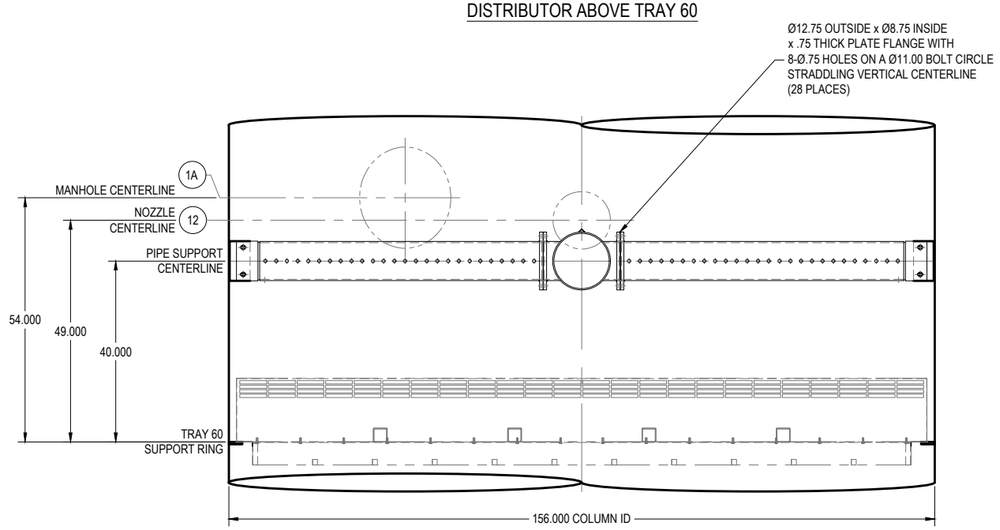

ELEVATION VIEW

1 PIPES SHOULD BE INSTALLED WITH HOLES ON HORIZONTAL CENTERLINE. DRAIN HOLES ON PIPES SHOULD BE ON BOTTOM OF PIPE, MARK INDICATING TOP OF PIPE SHOULD BE ON THE TOP SIDE.

uop CERTIFIED DRAWING

SYMBOL KEY	
XXXX	PART NUMBER
XX	NOZZLE
XX/X	NOZZLE
X	REVISION
XXX	ASSEMBLY DETAIL
XX	NOTES

CONFIDENTIAL

THE INFORMATION CONTAINED HEREIN IS PROPRIETARY INFORMATION AND SHALL NOT BE COPIED AND/OR REPRODUCED IN ANY MANNTER, NOR USED FOR ANY PURPOSE WHATSOEVER EXCEPT AS SPECIFICALLY PERMITTED PURSUANT TO WRITTEN AGREEMENT WITH UOP

CUSTOMER : CENOVUS ENERGY LIMA REFINERY
LOCATION : LIMA, OHIO, USA
ITEM NO. : DA-C-3001 TETRA EXTRACTOR
P.O. NO. : 8401698824

DIRECT INQUIRIES PERTAINING TO THIS DRAWING AND ASSOCIATED EQUIPMENT TO UOP TONAWANDA

TITLE: INSTALLATION LEAN SOLVENT DISTRIBUTOR ABOVE TRAY 60

BY	DATE	SCALE
JAD	1/18/24	1:16
CHECKED DMW 1/24		NO. SHTS. 15
REVIEWED PJW 1/24		SHT.NO. 9
APPROVED JRU 2/1/24		LATEST REVISION: 1

Honeywell UOP
175 E. PARK DRIVE
TONAWANDA, NY 14151-0986

DWG. NO. D- 2293969

REV	ALTERATION	DATE	BY	CHK'D	REV'D	APPV'D
1	ISSUED CERTIFIED	2/23/24	JAD	DMW 2/24	PJW 2/24	JRU 2/23/24

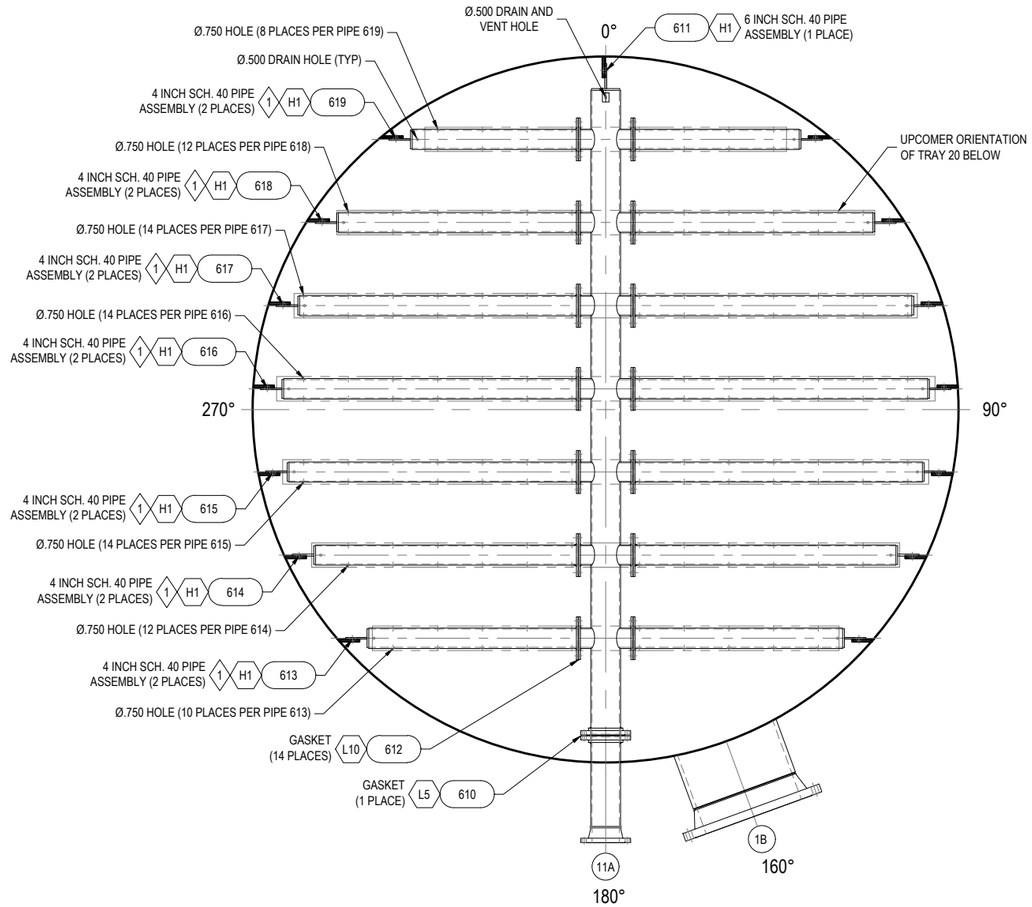

PLAN VIEW OF FEED 11A DISTRIBUTOR ABOVE TRAY 20

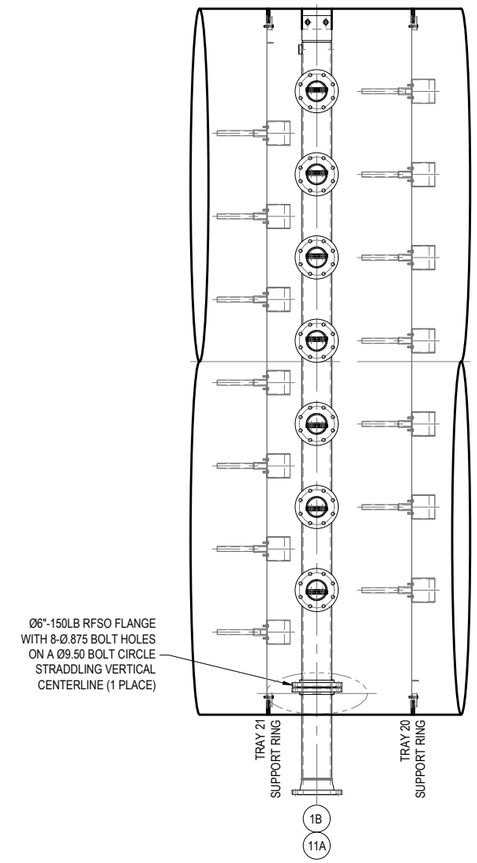

ELEVATION VIEW

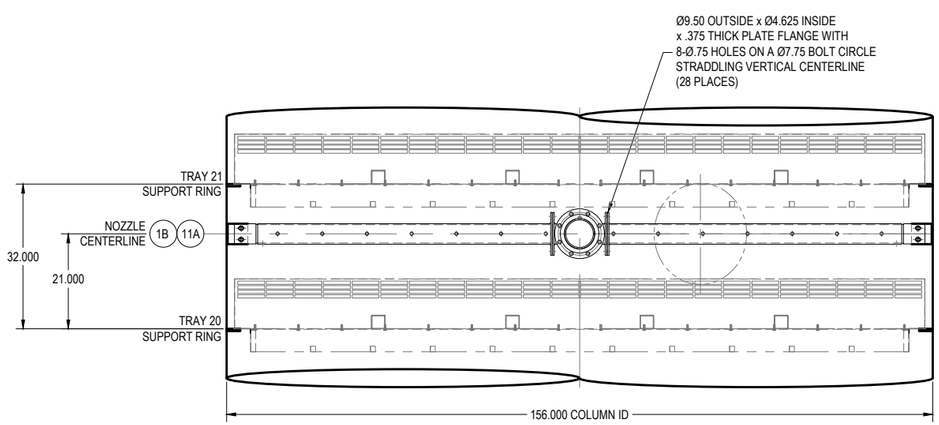

ELEVATION VIEW

1 PIPES SHOULD BE INSTALLED WITH HOLES ON HORIZONTAL CENTERLINE. DRAIN HOLES ON PIPES SHOULD BE ON BOTTOM OF PIPE, MARK INDICATING TOP OF PIPE SHOULD BE ON THE TOP SIDE.

uop CERTIFIED DRAWING

SYMBOL KEY	
XXXX	PART NUMBER
XX	NOZZLE
XX/X	NOZZLE
X	REVISION
XXX	ASSEMBLY DETAIL
XX	NOTES

CONFIDENTIAL

THE INFORMATION CONTAINED HEREIN IS PROPRIETARY INFORMATION AND SHALL NOT BE COPIED AND/OR REPRODUCED IN ANY MANNTER, NOR USED FOR ANY PURPOSE WHATSOEVER EXCEPT AS SPECIFICALLY PERMITTED PURSUANT TO WRITTEN AGREEMENT WITH UOP

CUSTOMER : CENOVUS ENERGY LIMA REFINERY
LOCATION : LIMA, OHIO, USA
ITEM NO. : DA-C-3001 TETRA EXTRACTOR
P.O. NO. : 8401698824

DIRECT INQUIRIES PERTAINING TO THIS DRAWING AND ASSOCIATED EQUIPMENT TO UOP TONAWANDA

TITLE: INSTALLATION FEED 11A DISTRIBUTOR ABOVE TRAY 20

BY	DATE	SCALE
JAD	1/18/24	1:16
CHECKED DMW	1/24	NO. SHTS. 15
REVIEWED PJW	1/24	SHT.NO. 10
APPROVED JRU	2/1/24	LATEST REVISION: 1

Honeywell UOP
175 E. PARK DRIVE
TONAWANDA, NY 14151-0986

DWG. NO. D- 2293969

REV	ALTERATION	DATE	BY	CHK'D	REV'D	APPV'D
1	ISSUED CERTIFIED	2/23/24	JAD	DMW 2/24	PJW 2/24	JRU 2/23/24

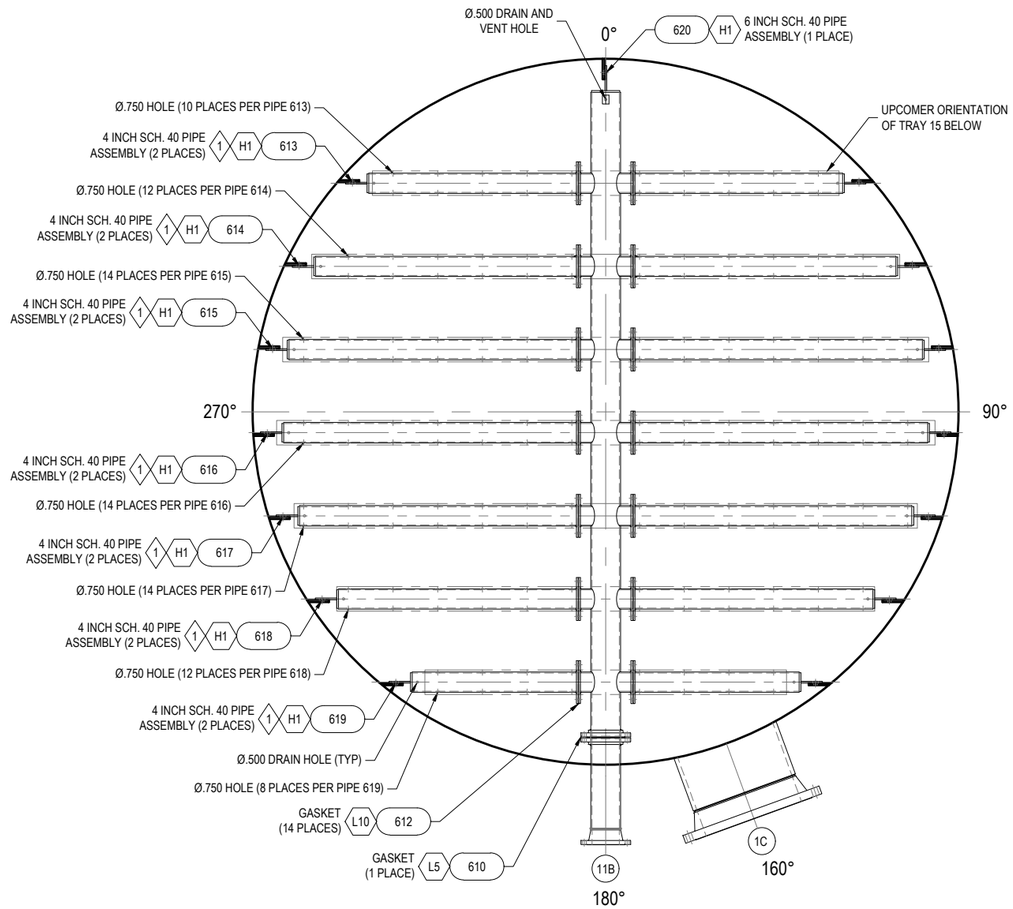

PLAN VIEW OF FEED 11B DISTRIBUTOR ABOVE TRAY 15

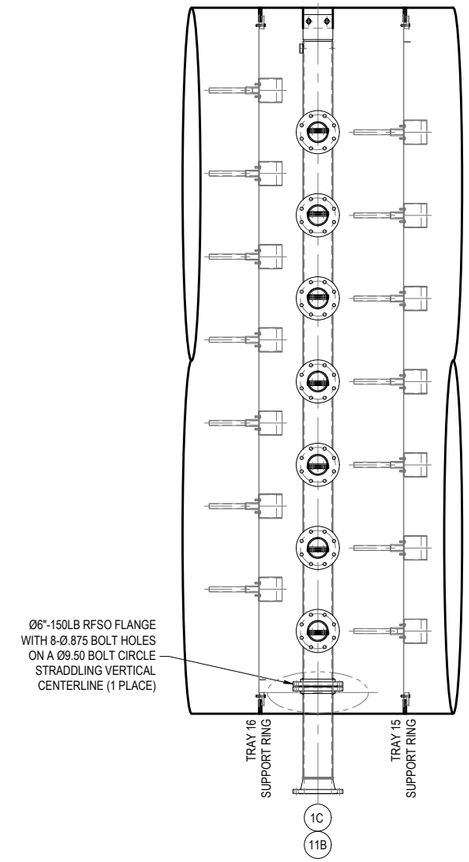

ELEVATION VIEW

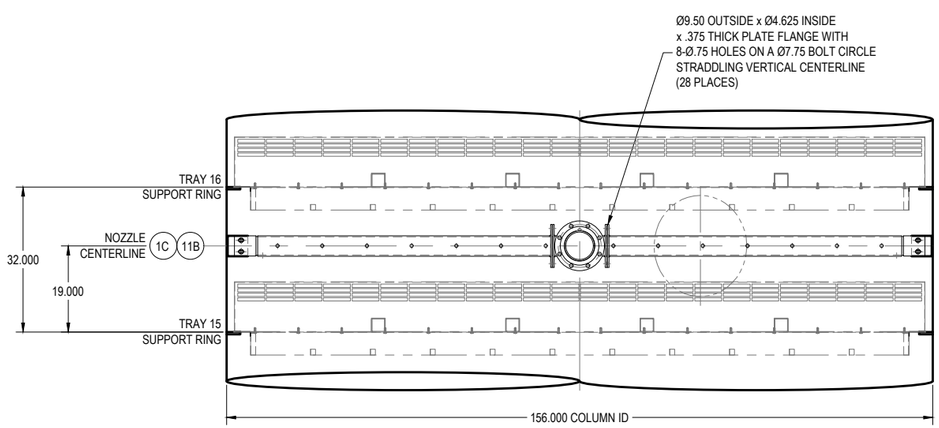

ELEVATION VIEW

1 PIPES SHOULD BE INSTALLED WITH HOLES ON HORIZONTAL CENTERLINE. DRAIN HOLES ON PIPES SHOULD BE ON BOTTOM OF PIPE, MARK INDICATING TOP OF PIPE SHOULD BE ON THE TOP SIDE.

uop CERTIFIED DRAWING

SYMBOL KEY	
XXXX	PART NUMBER
XX	NOZZLE
XX/X	NOZZLE
X	REVISION
XXX	ASSEMBLY DETAIL
XX	NOTES

CONFIDENTIAL

THE INFORMATION CONTAINED HEREIN IS PROPRIETARY INFORMATION AND SHALL NOT BE COPIED AND/OR REPRODUCED IN ANY MANNTER, NOR USED FOR ANY PURPOSE WHATSOEVER EXCEPT AS SPECIFICALLY PERMITTED PURSUANT TO WRITTEN AGREEMENT WITH UOP

CUSTOMER : CENOVUS ENERGY LIMA REFINERY
LOCATION : LIMA, OHIO, USA
ITEM NO. : DA-C-3001 TETRA EXTRACTOR
P.O. NO. : 8401698824

DIRECT INQUIRIES PERTAINING TO THIS DRAWING AND ASSOCIATED EQUIPMENT TO UOP TONAWANDA

TITLE: INSTALLATION FEED 11B DISTRIBUTOR ABOVE TRAY 15

BY	DATE	SCALE
JAD	1/18/24	1:16
CHECKED DMW	1/24	NO. SHTS. 15
REVIEWED PJW	1/24	SHT.NO. 11
APPROVED JRU	2/1/24	LATEST REVISION: 1

Honeywell UOP
175 E. PARK DRIVE
TONAWANDA, NY 14151-0986

DWG. NO. D- 2293969

REV	ALTERATION	DATE	BY	CHK'D	REV'D	APPV'D
1	ISSUED CERTIFIED	2/23/24	JAD	DMW 2/24	PJW 2/24	JRU 2/23/24

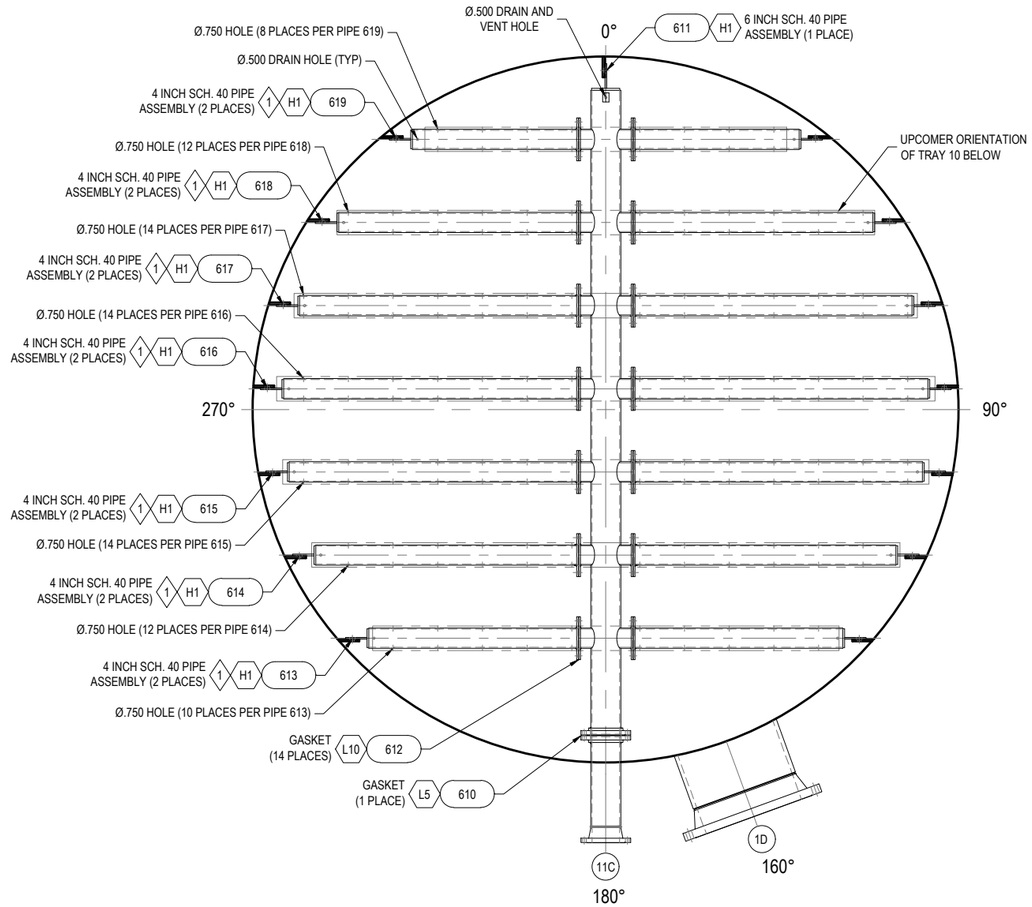

PLAN VIEW OF FEED 11C DISTRIBUTOR ABOVE TRAY 10

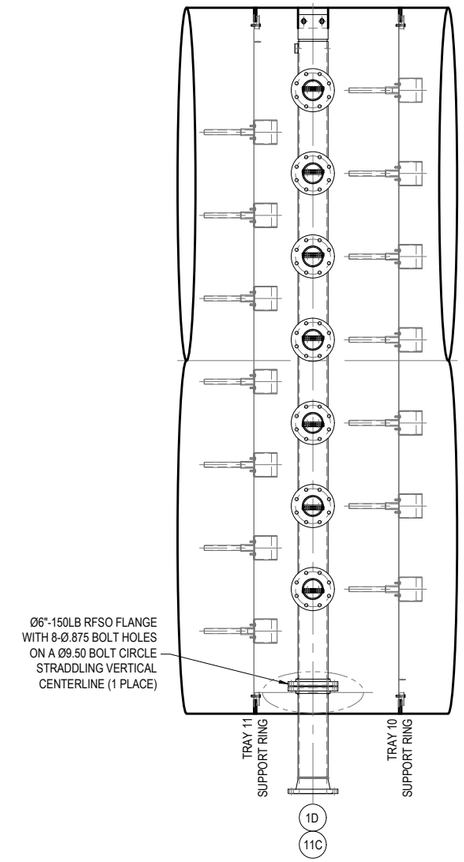

ELEVATION VIEW

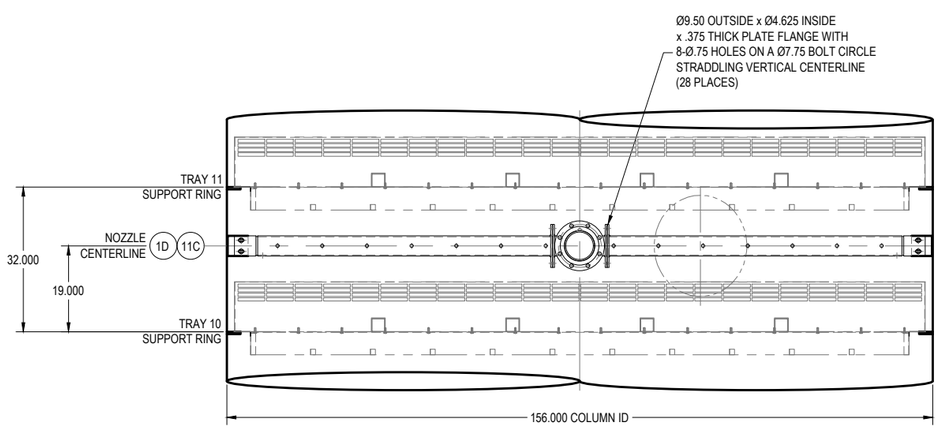

ELEVATION VIEW

1 PIPES SHOULD BE INSTALLED WITH HOLES ON HORIZONTAL CENTERLINE. DRAIN HOLES ON PIPES SHOULD BE ON BOTTOM OF PIPE, MARK INDICATING TOP OF PIPE SHOULD BE ON THE TOP SIDE.

UOP CERTIFIED DRAWING

SYMBOL KEY	
XXXX	PART NUMBER
XX	NOZZLE
XX/X	NOZZLE
X	REVISION
XXX	ASSEMBLY DETAIL
XX	NOTES

CONFIDENTIAL

THE INFORMATION CONTAINED HEREIN IS PROPRIETARY INFORMATION AND SHALL NOT BE COPIED AND/OR REPRODUCED IN ANY MANNTER, NOR USED FOR ANY PURPOSE WHATSOEVER EXCEPT AS SPECIFICALLY PERMITTED PURSUANT TO WRITTEN AGREEMENT WITH UOP

CUSTOMER : CENOVUS ENERGY LIMA REFINERY
LOCATION : LIMA, OHIO, USA
ITEM NO. : DA-C-3001 TETRA EXTRACTOR
P.O. NO. : 8401698824

DIRECT INQUIRIES PERTAINING TO THIS DRAWING AND ASSOCIATED EQUIPMENT TO UOP TONAWANDA

TITLE: INSTALLATION FEED 11C DISTRIBUTOR ABOVE TRAY 10

BY	DATE	SCALE
JAD	1/18/24	1:16
CHECKED DMW	1/24	NO. SHTS. 15
REVIEWED PJW	1/24	SHT.NO. 12
APPROVED JRU	2/1/24	LATEST REVISION: 1

Honeywell UOP
175 E. PARK DRIVE
TONAWANDA, NY 14151-0986

DWG. NO. D- 2293969

REV	ALTERATION	DATE	BY	CHK'D	REV'D	APPV'D
1	ISSUED CERTIFIED	2/23/24	JAD	DMW 2/24	PJW 2/24	JRU 2/23/24

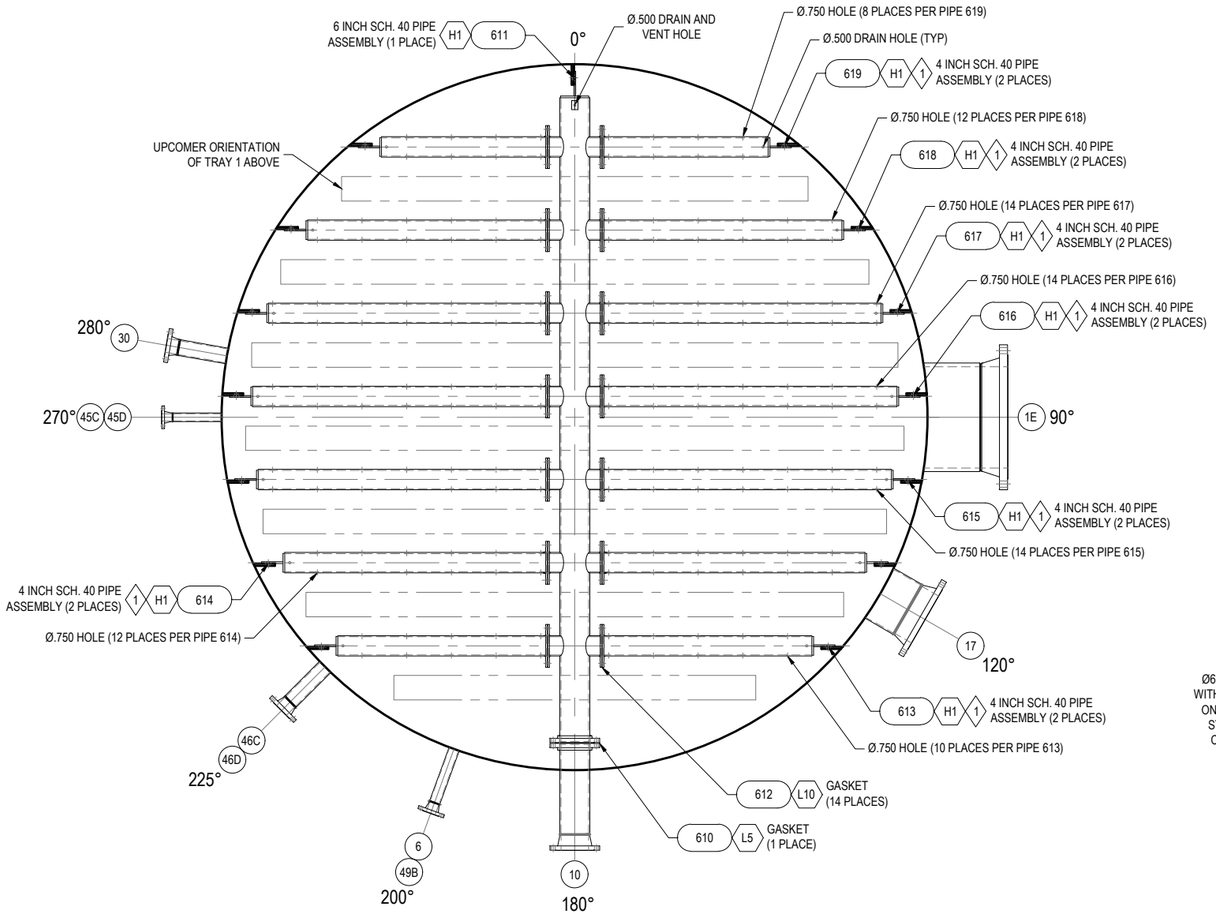

PLAN VIEW OF REFLUX 10 DISTRIBUTOR BELOW TRAY 1

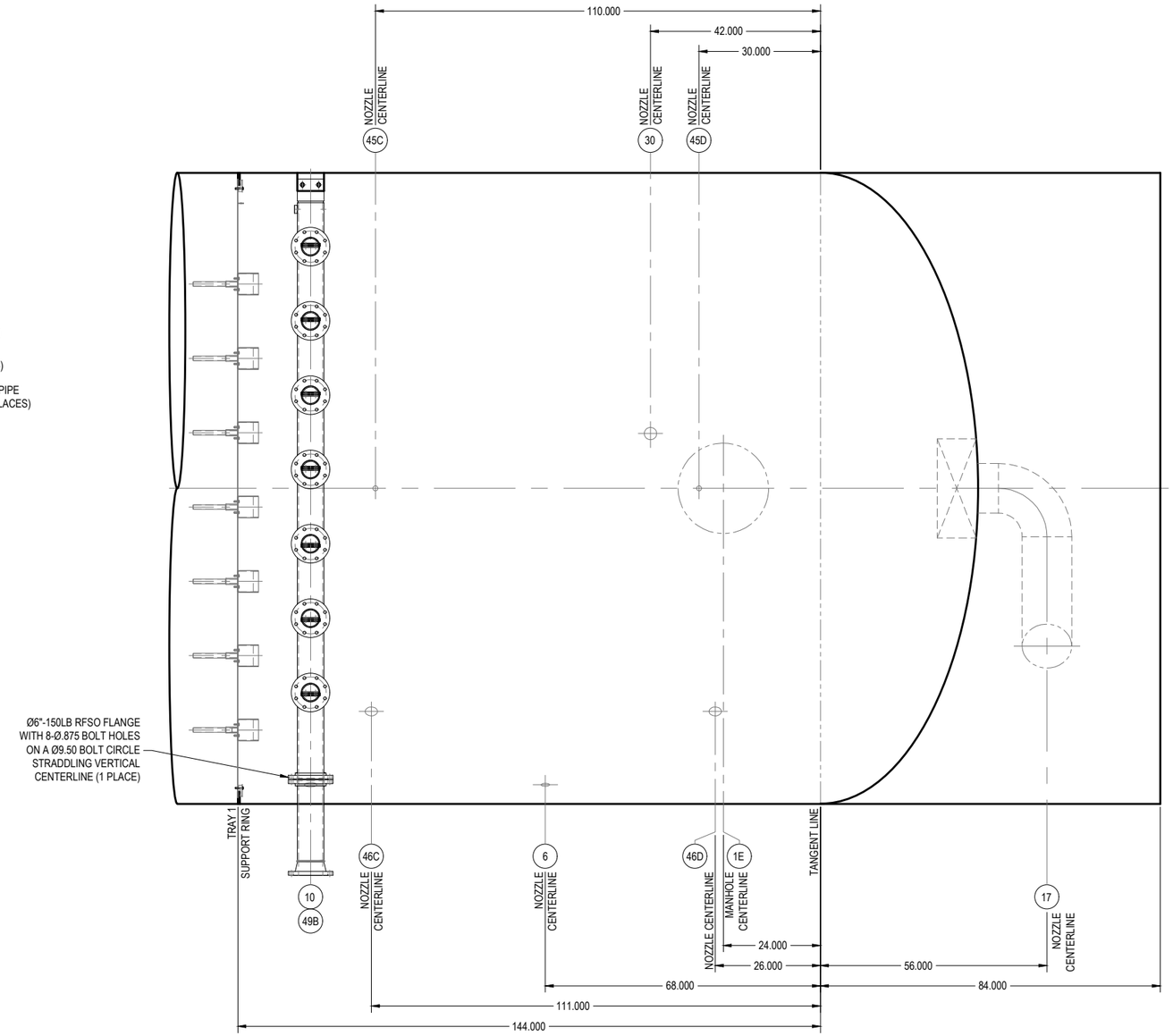

ELEVATION VIEW

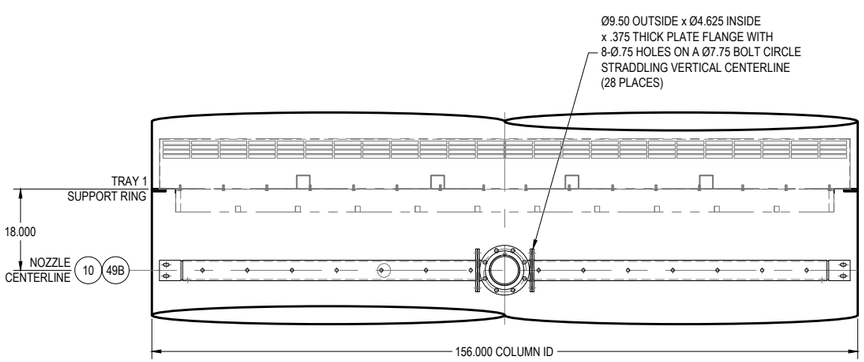

ELEVATION VIEW

1 PIPES SHOULD BE INSTALLED WITH HOLES ON HORIZONTAL CENTERLINE. DRAIN HOLES ON PIPES SHOULD BE ON BOTTOM OF PIPE, MARK INDICATING TOP OF PIPE SHOULD BE ON THE TOP SIDE.

SYMBOL KEY	
XXXX	PART NUMBER
XX	NOZZLE
XX/X	NOZZLE
X	REVISION
XXX	ASSEMBLY DETAIL
XX	NOTES

UOP CERTIFIED DRAWING

CONFIDENTIAL

THE INFORMATION CONTAINED HEREIN IS PROPRIETARY INFORMATION AND SHALL NOT BE COPIED AND/OR REPRODUCED IN ANY MANNTER, NOR USED FOR ANY PURPOSE WHATSOEVER EXCEPT AS SPECIFICALLY PERMITTED PURSUANT TO WRITTEN AGREEMENT WITH UOP

CUSTOMER : CENOVUS ENERGY LIMA REFINERY
LOCATION : LIMA, OHIO, USA
ITEM NO. : DA-C-3001 TETRA EXTRACTOR
P.O. NO. : 8401698824

DIRECT INQUIRIES PERTAINING TO THIS DRAWING AND ASSOCIATED EQUIPMENT TO UOP TONAWANDA

TITLE: INSTALLATION REFLUX 10 DISTRIBUTOR BELOW TRAY 1

BY JAD	DATE 1/18/24	SCALE 1:16	
CHECKED DMW 1/24		NO. SHTS. 15	LATEST REVISION: 1
REVIEWED PJW 1/24		SHT.NO. 13	
APPROVED JRU 2/1/24			

Honeywell UOP
175 E. PARK DRIVE
TONAWANDA, NY 14151-0986

DWG. NO. D- 2293969

REV	ALTERATION	DATE	BY	CHK'D	REV'D	APPV'D
1	ISSUED CERTIFIED	2/23/24	JAD	DMW 2/24	PJW 2/24	JRU 2/23/24

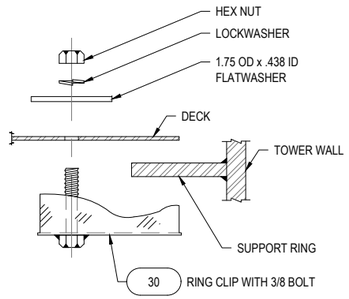

A1 3" RING CLIP DETAIL

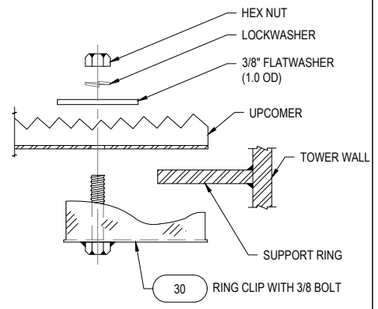

A2 3" RING CLIP DETAIL

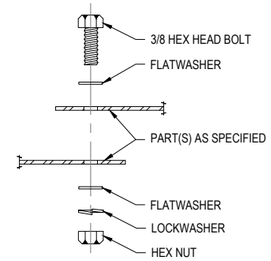

B3 GENERAL ASSEMBLY DETAIL

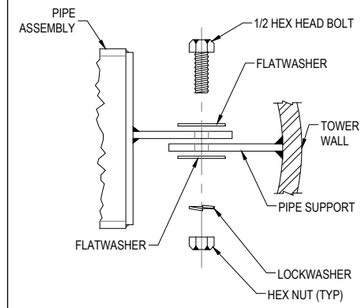

H1 PIPE ATTACHMENT DETAIL

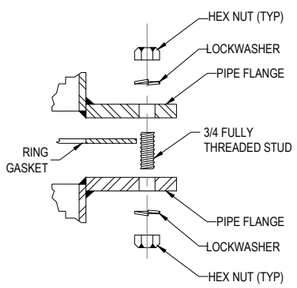

L5 PIPE FLANGE DETAIL (3/4)

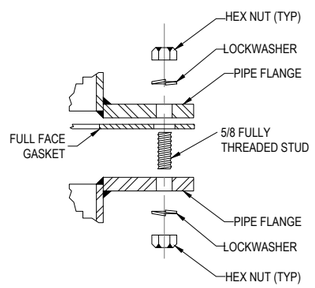

L10 PIPE FLANGE DETAIL (5/8)

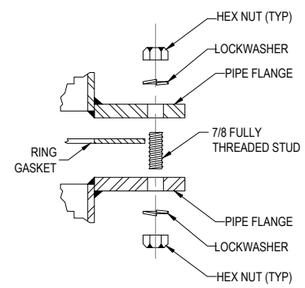

L38 PIPE FLANGE DETAIL (7/8)

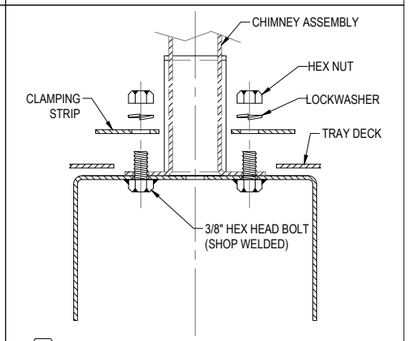

P10 UPCOMER CLAMPING STRIP ASSEMBLY

UOP CERTIFIED DRAWING

SYMBOL KEY	
XXXX	PART NUMBER
XX	NOZZLE
XX/X	NOZZLE
X	REVISION
XXX	ASSEMBLY DETAIL
XX	NOTES

CONFIDENTIAL

THE INFORMATION CONTAINED HEREIN IS PROPRIETARY INFORMATION AND SHALL NOT BE COPIED AND/OR REPRODUCED IN ANY MANNTER, NOR USED FOR ANY PURPOSE WHATSOEVER EXCEPT AS SPECIFICALLY PERMITTED PURSUANT TO WRITTEN AGREEMENT WITH UOP

CUSTOMER : CENOVUS ENERGY LIMA REFINERY
LOCATION : LIMA, OHIO, USA
ITEM NO. : DA-C-3001 TETRA EXTRACTOR
P.O. NO. : 8401698824

DIRECT INQUIRIES PERTAINING TO THIS DRAWING AND ASSOCIATED EQUIPMENT TO UOP TONAWANDA

TITLE: INSTALLATION ASSEMBLY DETAILS

BY	DATE	SCALE
JAD	1/18/24	NTS
CHECKED DMW	1/24	NO. SHTS. 15
REVIEWED PJW	1/24	SHT.NO. 14
APPROVED JRU	2/1/24	LATEST REVISION: 1

Honeywell UOP
175 E. PARK DRIVE
TONAWANDA, NY 14151-0986

DWG. NO. D- 2293969

REV	ALTERATION	DATE	BY	CHK'D	REV'D	APPV'D
1	ISSUED CERTIFIED	2/23/24	JAD	DMW 2/24	PJW 2/24	JRU 2/23/24

TRAY PART LIST

PART NO.	REQ'D FOR ONE TRAY	DESCRIPTION OF PART	TTL REQ'D	USED ON TRAYS NO
1101	1	UPCOMER	1	60
1102	1	UPCOMER	1	60
1103	1	UPCOMER	1	60
1104	1	UPCOMER	1	60
1105	1	UPCOMER	1	60
1106	1	UPCOMER	1	60
1107	1	UPCOMER	1	60
2101	1	UPCOMER	7	6-11, 59
2102	1	UPCOMER	7	6-11, 59
2103	1	UPCOMER	7	6-11, 59
2104	1	UPCOMER	7	6-11, 59
2105	1	UPCOMER	7	6-11, 59
2106	1	UPCOMER	7	6-11, 59
2107	1	UPCOMER	7	6-11, 59
3101	1	UPCOMER	18	1-5, 46-58
3102	1	UPCOMER	18	1-5, 46-58
3103	1	UPCOMER	18	1-5, 46-58
3104	1	UPCOMER	18	1-5, 46-58
3105	1	UPCOMER	18	1-5, 46-58
3106	1	UPCOMER	18	1-5, 46-58
3107	1	UPCOMER	18	1-5, 46-58
4101	1	UPCOMER	15	31-45
4102	1	UPCOMER	15	31-45
4103	1	UPCOMER	15	31-45
4104	1	UPCOMER	15	31-45
4105	1	UPCOMER	15	31-45
4106	1	UPCOMER	15	31-45
4107	1	UPCOMER	15	31-45
5101	1	UPCOMER	7	24-30
5102	1	UPCOMER	7	24-30
5103	1	UPCOMER	7	24-30
5104	1	UPCOMER	7	24-30
5105	1	UPCOMER	7	24-30
5106	1	UPCOMER	7	24-30
5107	1	UPCOMER	7	24-30
6101	1	UPCOMER	2	22-23
6102	1	UPCOMER	2	22-23
6103	1	UPCOMER	2	22-23
6104	1	UPCOMER	2	22-23
6105	1	UPCOMER	2	22-23
6106	1	UPCOMER	2	22-23
6107	1	UPCOMER	2	22-23
7101	1	UPCOMER	1	21
7102	1	UPCOMER	1	21
7103	1	UPCOMER	1	21
7104	1	UPCOMER	1	21
7105	1	UPCOMER	1	21
7106	1	UPCOMER	1	21
7107	1	UPCOMER	1	21
8101	1	UPCOMER	9	12-20
8102	1	UPCOMER	9	12-20
8103	1	UPCOMER	9	12-20
8104	1	UPCOMER	9	12-20
8105	1	UPCOMER	9	12-20
8106	1	UPCOMER	9	12-20
8107	1	UPCOMER	9	12-20
111-1	1	CLAMPING STRIP	60	1-60
111-2	1	CLAMPING STRIP	60	1-60
112-1	1	CLAMPING STRIP	60	1-60
112-2	1	CLAMPING STRIP	60	1-60
113-1	1	CLAMPING STRIP	60	1-60
113-2	1	CLAMPING STRIP	60	1-60
114-1	1	CLAMPING STRIP	60	1-60
114-2	1	CLAMPING STRIP	60	1-60
115-1	1	CLAMPING STRIP	60	1-60
115-2	1	CLAMPING STRIP	60	1-60
116-1	1	CLAMPING STRIP	60	1-60
116-2	1	CLAMPING STRIP	60	1-60
117-1	1	CLAMPING STRIP	60	1-60
117-2	1	CLAMPING STRIP	60	1-60
1001	1	TRAY DECK SEGMENT	60	1-60
1002	1	TRAY DECK SEGMENT	60	1-60
1003	1	TRAY DECK SEGMENT	60	1-60
1004	1	TRAY DECK SEGMENT	60	1-60
1005	1	TRAY DECK SEGMENT	60	1-60
1006	1	TRAY DECK SEGMENT	60	1-60
1007	1	TRAY DECK SEGMENT	60	1-60
1008	1	TRAY DECK SEGMENT	60	1-60
1009	1	TRAY DECK SEGMENT	60	1-60

DISTRIBUTOR PART LIST

PART NO.	REQ'D FOR ONE TRAY	DESCRIPTION OF PART	TTL REQ'D	USED ON TRAYS NO
600	1	12 INCH GASKET ***	2	ABOVE TRAY 60
601	1	12 INCH PIPE ASSEMBLY	1	ABOVE TRAY 60
602	14	8 INCH GASKET ***	15	ABOVE TRAY 60
603	2	8 INCH PIPE ASSEMBLY	2	ABOVE TRAY 60
604	2	8 INCH PIPE ASSEMBLY	2	ABOVE TRAY 60
605	2	8 INCH PIPE ASSEMBLY	2	ABOVE TRAY 60
606	2	8 INCH PIPE ASSEMBLY	2	ABOVE TRAY 60
607	2	8 INCH PIPE ASSEMBLY	2	ABOVE TRAY 60
608	2	8 INCH PIPE ASSEMBLY	2	ABOVE TRAY 60
609	2	8 INCH PIPE ASSEMBLY	2	ABOVE TRAY 60
621	1	12 INCH PIPE ASSEMBLY	1	ABOVE TRAY 60
610	1	6 INCH GASKET ***	5	BELOW TRAY 1, ABOVE TRAYS 10, 15, 20
611	1	6 INCH PIPE ASSEMBLY	3	BELOW TRAY 1, ABOVE TRAYS 10, 20
612	14	4 INCH GASKET ***	60	BELOW TRAY 1, ABOVE TRAYS 10, 15, 20
613	2	4 INCH PIPE ASSEMBLY	8	BELOW TRAY 1, ABOVE TRAYS 10, 15, 20
614	2	4 INCH PIPE ASSEMBLY	8	BELOW TRAY 1, ABOVE TRAYS 10, 15, 20
615	2	4 INCH PIPE ASSEMBLY	8	BELOW TRAY 1, ABOVE TRAYS 10, 15, 20
616	2	4 INCH PIPE ASSEMBLY	8	BELOW TRAY 1, ABOVE TRAYS 10, 15, 20
617	2	4 INCH PIPE ASSEMBLY	8	BELOW TRAY 1, ABOVE TRAYS 10, 15, 20
618	2	4 INCH PIPE ASSEMBLY	8	BELOW TRAY 1, ABOVE TRAYS 10, 15, 20
619	2	4 INCH PIPE ASSEMBLY	8	BELOW TRAY 1, ABOVE TRAYS 10, 15, 20
620	1	6 INCH PIPE ASSEMBLY	1	ABOVE TRAY 15

*** INCLUDES ONE SPARE FOR EACH SIZE FOR EACH DISTRIBUTOR

HARDWARE LIST

PART NO.	DESCRIPTION OF PART	TTL REQ'D
30	RING CLIP **	4,914
-	3/8" x 1.0" LG HEX HEAD BOLT **	567
-	1/2" x 2.0" LG HEX HEAD BOLT **	159
-	5/8" x 4.0" LG STUD **	588
-	3/4" x 4.5" LG STUD **	34
-	7/8" x 5.0" LG STUD **	14
-	3/8" HEX NUT **	17,703
-	1/2" HEX NUT **	159
-	5/8" HEX NUT **	1,176
-	3/4" HEX NUT **	68
-	7/8" HEX NUT **	26
-	3/8" LOCKWASHER **	17,703
-	1/2" LOCKWASHER **	159
-	5/8" LOCKWASHER **	1,176
-	3/4" LOCKWASHER **	68
-	7/8" LOCKWASHER **	26
-	3/8" FLAT WASHER ** (1.0" O.D.)	2,898
-	1/2" FLAT WASHER **	318
-	.438 I.D. x 1.750 O.D. FLAT WASHER **	3,150

** INCLUDES 5% SPARES (2 MINIMUM)

MATERIAL LIST

	PART	THICKNESS	MATERIAL	SPECIFICATION
	GASKET	1/16 INCH (1.6mm)	PTFE	-
	PIPE (DIA. > 6")	SEE DWGS.	CARBON STEEL	ASTM A-106 Gr B
	PIPE (DIA. ≤ 6")	SEE DWGS.	CARBON STEEL	ASTM A-106 Gr B
	PLATE	SEE DWGS.	CARBON STEEL	ASTM A-516 Gr 70
	UPCOMER	.0787 INCH (2mm)	410S STAINLESS STEEL	ASTM A-240
	CLAMPING STRIP	.0787 INCH (2mm)	410S STAINLESS STEEL	ASTM A-240
	TRAY DECK	.0787 INCH (2mm)	410S STAINLESS STEEL	ASTM A-240
1	RING CLIP BODY (PN 30)	.1181 INCH (3mm)	410S STAINLESS STEEL	ASTM A-240
	THREADED STUD	UNC	410 STAINLESS STEEL	NONE
	BOLT	UNC	410 STAINLESS STEEL	ASTM A-193 B6
	NUT	UNC	410 STAINLESS STEEL	ASTM A-194 Gr 6
	LOCKWASHER	UNC	304 STAINLESS STEEL	NONE
	FLATWASHER	UNC	410 STAINLESS STEEL	NONE
1	FLATWASHER 1.75 O.D./.438 I.D.	.1575 INCH (4mm)	410S STAINLESS STEEL	ASTM A-240

TRAY INSTALLATION NOTES

1. ALL TRAYS ARE TOP INSTALLABLE AND TOP REMOVABLE.
2. TRAYS ARE TO BE NUMBERED FROM BOTTOM OF THE COLUMN.
3. ALL FABRICATED PARTS (EXCEPT FASTENERS AND SMALL HARDWARE ITEMS) ARE METAL DIE STAMPED WITH THE PART NUMBERS AND ARE LISTED ON THIS DRAWING.
4. AT ALL TIMES, THE HOLE EDGES SURROUNDING THE BURRED PERFORATED HOLES ON THE UNDERSIDE OF THE EXTRACTOR TRAY DECKING MUST BE PROTECTED FROM MECHANICAL DAMAGE. THE BURRED SIDE OF THE DECKING MUST BE ON THE UNDERSIDE OF THE TRAY WHEN INSTALLED.
5. 5 PERCENT CONSTRUCTION SPARES ARE PROVIDED ON FASTENERS AND 5 PERCENT CONSTRUCTION SPARES ARE PROVIDED ON CLIPS.
6. ALL BOLTING REQUIRES A LOCKWASHER.
7. ALTHOUGH ALL OF THE UPCOMER ASSEMBLIES HAVE THE SAME OUTWARD APPEARANCE, THE PRESSURE DROP HOLES IN THE SETTLING BOXES OF THE UPCOMER ASSEMBLIES VARY THROUGHOUT THE COLUMN. IT IS EXTREMELY IMPORTANT THAT THE CORRECTLY NUMBERED UPCOMERS AND DECKS ARE INSTALLED PER DRAWING D-2293969, SHEETS 1-8.
8. ALL TRAY PARTS ARE DESIGNED TO PASS THROUGH A Ø22.375 INCH MINIMUM ID MANHOLE.

UOP CERTIFIED DRAWING

SYMBOL KEY	
XXXX	PART NUMBER
XX	NOZZLE
XX/X	NOZZLE
X	REVISION
XXX	ASSEMBLY DETAIL
XX	NOTES

CONFIDENTIAL

THE INFORMATION CONTAINED HEREIN IS PROPRIETARY INFORMATION AND SHALL NOT BE COPIED AND/OR REPRODUCED IN ANY MANNTER, NOR USED FOR ANY PURPOSE WHATSOEVER EXCEPT AS SPECIFICALLY PERMITTED PURSUANT TO WRITTEN AGREEMENT WITH UOP

CUSTOMER : CENOVUS ENERGY LIMA REFINERY
LOCATION : LIMA, OHIO, USA
ITEM NO. : DA-C-3001 TETRA EXTRACTOR
P.O. NO. : 8401698824

DIRECT INQUIRIES PERTAINING TO THIS DRAWING AND ASSOCIATED EQUIPMENT TO UOP TONAWANDA

TITLE: INSTALLATION PARTS LIST, MATERIALS AND GENERAL NOTES

BY	DATE	SCALE
JAD	1/18/24	NTS
CHECKED DMW	1/24	NO. SHTS. 15
REVIEWED PJW	1/24	SHT.NO. 15
APPROVED JRU	2/1/24	LATEST REVISION: 1

Honeywell UOP
175 E. PARK DRIVE
TONAWANDA, NY 14151-0986

DWG. NO. D- 2293969

REV	ALTERATION	DATE	BY	CHK'D	REV'D	APPV'D
1	ISSUED CERTIFIED; 4 WAS 3.4; .1575 WAS .135; 3 WAS 2.7; .1181 WAS .105	2/23/24	JAD	DMW 2/24	PJW 2/24	JRU 2/23/24