Instruction Manual

Shipname:
M/V ”Seis Ranger”
Yard:
Mjellem & Karlsen

Crane type:
GPCFO 2000-5020
Crane no.:
2078

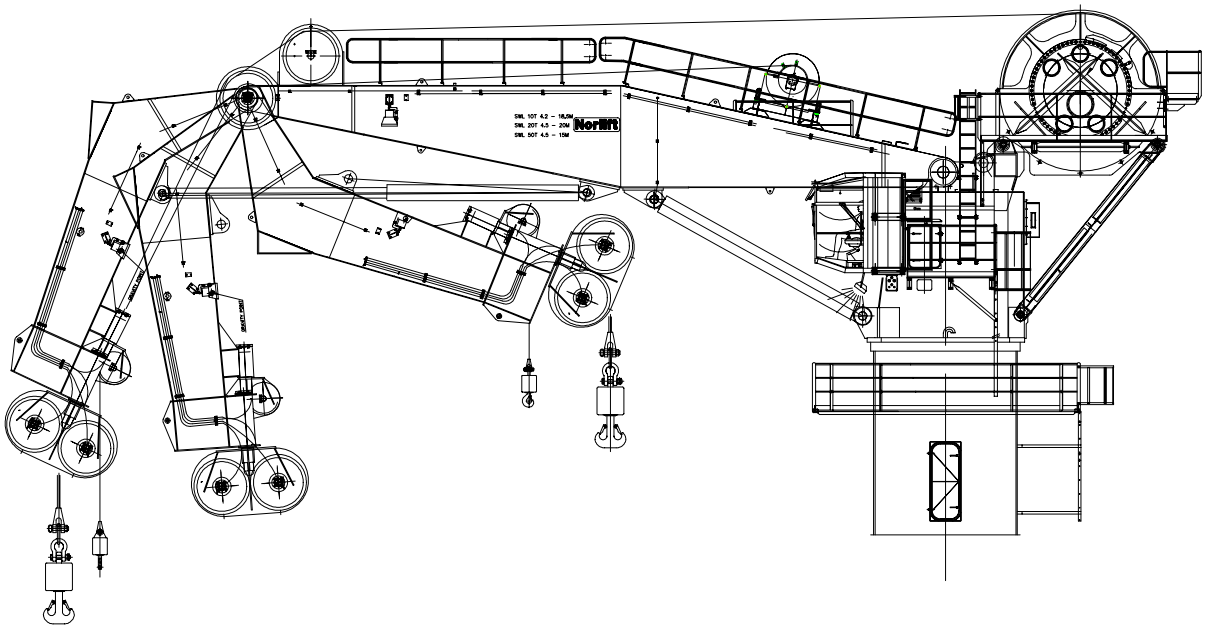

Chapter 1: General Information

101 Key information's
102 Co-operating companies 2/2
103 Hydraulic symbols 3/3
104 Electric symbols 4/4

Chapter 2: Technical Description

201 Technical specification 5/5
202 General arrangement
203 Main part list
204 Reeving arrangement
205 Spare parts & Tool list

Chapter 3: Crane Operation

301 Crane start-up/operation & parking
302 Emergency operation 2/2
303 Operation, start - stop of crane 7/7
304 Guidelines, Lifting from sea or seabed 2/2

Chapter 4: Crane Description

401 Hydraulic description 3/3
402 Hydraulic diagram 2/2
403 Electric description
404 Electric diagram & cable lists 3/3

Chapter 5: Crane Maintenance

501 Maintenance program
502 Lubrication points and intervals
503 Comparison chart
504 Oil quantity
505 Slewing ring bolts tightening
506 Wire rope handling 5/5
507 Electric equipment 2/2
508 Limit switches 11/11
509 Control unit for prop. Valves and on/off valves
510 Digital 1 & 2 limits thermostat
511 Electrical connections and adjustment - potentiometer in preamplifier
512 Imporatant information, Crane blocks & swivel 2/2

Chapter 6: Slewing Machinery

601 Slewing machinery assembly
602 Slewing gear 9/9
603 Slewing motor

Chapter 7: Luffing Machinery

701-1 Luffing cylinder Spare Part List
701-2 Folding Cylinder Spare Part List
702-1 Cylinder Hinge Assembly - Left hand ver.
702-2 Cylinder Hinge Assembly - Right hand ver.
702-3 Folding Cylinder Hinge Assembly
703-1 Jib Hinge Arrangement
703-2 Jib Hinge Between Jibs Arrangement
704 Arrangement, Wire sheaves between jibs
705 Jib Head Assembly - 50T
706 Jib Head Assembly - 10T
707 Jib Head on Jib assembly
708 Wire Sheave - 50T
709 Wire Sheave - 10T
710 Jib Limit Switch Arrangement
711 Angle Measure Arrangement
712 Angle Measure box complete

Chapter 8: Hoisting Machinery

801-1 Winch Assembly 50T
801-2 Part list 2/2
802 Winch Gear 8/8
803 Hydraulic Motor
804 Swivel Hook Assembly 50T
805 Winch Assembly 10T
806 Winch Gear 8/8
807 Hydraulic Motor
808 Swivel Hook Assembly 10T

Chapter 9: Power Pack

901 Pump Drive Main Assembly
902-1 Operation Instruction, Distributor gears 4/4
902-2 Spare parts list, pump drive (spreader gear)
902-3 Spreader gear, Oil level
903 Oil Filter for Tank
904 Filter / Breather
905 Level / Temp. Indicator

Chapter 10: Hydraulic Equipment

1001 Hydraulic Diagram 2/2
1002 Part and data list for hydr. Circuit 4/4
1003 Proportional directional spool valve, Spare parts list 16/16
1004 Oil cooler and Ventilation, Details and Assembly
1005 Flood light Assembly
1006 Emergency Hand Pump

Chapter 11: Electric Equipment

1101 Block diagram & cable list 3/3
1102 Circuit diagrams 28/28
1103 Terminal list diagrams 6/6
1104 Lay out, cabinet/Control Circuit diagrams 4/4
1105 Electrical equipment
1106 Electrical equipment in Base/Crane
1107 Electrical equipment on Crane/jib
1108 Electrical equipment on/in Cabin
1109 Starter cabinet +V1
1110 Control cabinet +V2 2/2
1111 Operators panel +P1
1112 Signal panel +P5
1113 Slip ring Arrangement

Chapter 12: Crane Cabin Arrangement

1201 Crane Cabin, equipment assembly

CRANE MAKER

TTS-Norlift AS MARINE CARGO GEAR

Postal address	:	**PO Box 32, Laksevaag, N-5847 Bergen, Norway**
Visit address	:	**Laksevaagsneset 12, N-5161 Laksevaag**
Phone	:	**+ 47 55 94 74 00**
Fax	:	**+ 47 55 94 74 01**
Sales/Aftersales fax	:	**+ 47 55 94 74 55**
E-mail	:	**office@tts-norlift.no**
Home page	:	**http://www.tts-technology.no/**

PRESIDENT	:	Arne B. Riple	Dir. dial: +47 55 94 74 10	**E-Mail:** abr@tts-norlift.no
SALES	:	Rune Tvedt	Dir. dial: + 47 94 74 08	**E-Mail:** rtv@tts-norlift.no
		Per Slettemoen	Dir. dial: +47 55 94 74 09 / Mobil: 916 48 022	**E-Mail:** psl@tts-norlift.no
		Jan-Tore Lygren	Dir. dial: +47 55 94 74 25 / Mobil: 906 32 596	**E-Mail:** jtl@tts-norlift.no
		Montserrat Folgueira	Dir. Dial: +47 55 94 74 47 / Mobil: 481 53 271	**E-Mail:** mfo@tts-norlift.no
SERVICE	:	Leiv Haaland	Dir. dial: +47 55 94 74 04 / Mobil: 918 33 074	**E-Mail:** lha@tts-norlift.no
SPARE PARTS	:	Jan-Ove Hovdenak	Dir. dial: +47 55 94 74 03	**E-Mail:** joh@tts-norlift.no
		Jan-Ove Liland	Dir. dial: +47 55 94 74 05	**E-Mail:** jol@tts-norlift.no
		Asle Nygård	Dir. dial: +47 55 94 74 06	**E-Mail:** any@tts-nolrift.no

CRANE REFERANCE

Ship Name / Hull No.	:	**M/V "Seis Ranger"**
Shipyard	:	**Mjellem & Karlsen**
Crane No.	:	**2078**
Crane type:	:	**GPCFO 2000-5020**

CO-OPERATING COMPANIES
SHIP AND OFFSHORE

SALES

Korea
Newko Engineering Corp.
1193-1 Najeon-Ri Tel.: +82 55 329 6997
Saengrim-Myun, Kimhae Fax.:+82 55 329 6996
Kyungnam 621-820 E-mail: newko@unitel.co.kr
KOREA

Japan
TTS Technology Japan Ltd
Eisen-Iwamotocho Bldg 4F Tel.: + 81 3 5833 3431
2-8-8 Iwamoto-cho Fax.: + 81 3 5833 3430
Chiyoda-ku, Tokyo 101-0032
JAPAN
E-mail: info@tts-technology-japan.co jp

Singapore
Plimsoll Corporation Pte. Ltd
48 Tuas Road Tel.: +65 861 3922
SINGAPORE 638500 Fax.:+65 862 4334
E-mail: corporate@plimsollcorp.com

Turkey
Senak
Cadessi Irem Apt. no.4DA Tel.: +90 212 2272 834
80690 Besiktas Fax: +90 212 2272 835
Istanbul E-mail: senak@comnet.com.tr
TURKEY

Benelux
Mourik & Snoei
Luytenstraat 12 Tel.: +31 180 662381
2941 CE Lekkerkerk Fax.: +31 180664331
HOLLAND

Greece
Oceanking technical & trading Ltd.
31, Bouboulinas str. Tel.: +30 142 96 774
Piraeus 185 35 Fax.: +30 142 96 820
GREECE
E-mail: oceanking@otenet.gr

Croatia
Vemi Trade d.o.o
Balancane 4 Tel.: +38 521 881 197
HR-21220 Trogir Fax.:+38 521 881 197
CROATIA

Italy
Marine EQ
34121 Trieste Tel.:+ 39 040 660550-
Via Cassa di Risparmio 6 3,356,344,999
ITALY Fax.: +39 040 660620

United Kingdom
European Crane Service
Unit 2, Kings Row Tel.: +44 1622 690392
Armstrong Road Fax. +44 1622 670066
Maidstone E-mail: ecs@btinternet.com
Kent ME 15 6AQ
UNITED KINGDOM

TTS-Group UK Office
18 Shade Avenue Tel: +44 161 620 9141
Springhead Fax: +44 161 633 7910
Oldham OL4 5SB
UNITED KINGDOM
E-mail: fcdtts_uk@btinternet.com

SALES

U.S.A
C.S. Controls, Inc
Dickson Road Tel.: +1 504 876 6040
Houma , La 70363 Fax.: +1 504 876 0751
USA E-mail: cscontrols@aol.com

C.S. Controls, Inc
Lincoln Street Tel: +1 714974 5684
Orange, CA 92865 Fax: +1 714974 5685
USA E-mail: cscca98@aol.com

Germany
Freudenberg Technische ausrustung GmbH
Deichstr. 26 Tel.: +49 4129 1222
D-26489 Haselau-Hohenhorst Fax: +49 4129 390
GERMANY

Spain
Manises Diesel Engine S.A.
Apdo. de Correos 1 Tel.: +34 96159 82 00
46930 Quart de Poblet Fax: +34 96159 8314
Valencia
SPAIN

China
TTS-Plimsoll (Shanghai) Co Ltd
21d, No. 2 Building Tel.: +86 21569 62570
158 Chang Chun Road Fax: +86 21569 62463
Shanghai 200081
CHINA
E-mail: sales@tts-plimsoll.com

Poland
TTS-Poland Ltd
ul. Waly Piastowskie 1 Tel.: +48 58307 4478
80-855 Gdansk Fax.: +48 58346 2761
POLAND
E-mail: witold.zylicz@aktro.com.pl

Taiwan
Trophex Engineering Corp.
2F, No. 96, sec.2 Tel.: +88 6 2 2500 7575
Chien Kuo N. Road Fax.: +88 6 2 2500 7373
Taipei
TAIWAN R.O.C

Brasil
IMC
R. Visconde De Piraja, 433/401 Tel.: +55 21 522 - 0696
Rio De Janeiro-RJ-Brasil Fax.: + 55 21 522 - 6945
22410-003 BRASIL

SERVICE

Korea
Newko Engineering Corp.
1193-1 Najeon-Ri Tel: +82 55 329 6997
Saengrim-Myun, Kimhae Fax: +82 55 329 6996
Kyungnam 621-820 E-mail: newko@unitel.co.kr
KOREA

Singapore
Plimsoll Corporation Pte. Ltd.
48 Tuas Road Tel.: +65 861 3922
SINGAPORE 638500 Fax.:+65 862 4334
E-mail: corporate@plimsollcorp.com

SERVICE

China
TTS-Plimsoll (Shanghai) Co Ltd
21d, No.2 Building Tel.: +86 21569 62570
158 Chang Chun Road Fax: +86 21569 62463
Shanghai 200081
CHINA
E-mail: plimsoll@public7.sta.net.cn

Taiwan
Trophex Engineering Corp.
2F, No. 96, sec.2 Tel.: + 886 2 2500 7575
Chien Kuo N. Road Fax.: +886 2 2500 7373
Taipei
TAIWAN R.O.C

Spain
Manises Diesel Engine S.A.
Apdo. de Correos 1 Tel.: +34 96 159 82 00
46930 Quart de Poblet Fax: +34 96 159 8314
SPAIN

U.S.A
C.S. Controls, INC.
101 Dickson Road Tel: +1 504 876 6040
Houma , La 70363 Fax.: +1 504 876 0751
USA E-mail: cscontrols@aol.com

Benelux
Mourik & Snoei Kraanservices B.V.
Luytenstraat 12 Tel.: +31 180 662381
2941 CE Lekkerkerk Fax.: +31 180 664331
HOLLAND

Finland
Marinserv oy
Terottajankatu 1 Tel: +35 82 12 43 79 39
PI 4 Fax.: +35 82 22 43 28 89
20781 Kaarina
FINLAND

LICENCE PROD.

Korea
Tae Kwang Precision Ind. Co. Ltd.
765-3 Naesam-Ri Tel: +82 55 33 86 881
Juchon-Myun Fax: +82 55 33 86 890
Kimhae
Kyungnam 621-840
KOREA

Spain
Manises Diesel Engine S.A.
Apdo. de Correos 1 Tel.: +34 96-159 82 00

46930 Quart de Poblet Fax: +34-96-159 8314
Valencia
SPAIN

CO-OPERATING COMPANIES
YARD EQUIPMENT

SALES

Greece

A. Galifou & Co.
185 Doranis St. Tel: +30 1 956 8660
17873 Kallithea Fax: +30 1 959 1455
Athens
GREECE

Oceanking Technical & Trading Ltd
31 Bouboulinas Street Tel: +30 1 429 6774
185 35 Piraeus Fax: +30 1 429 6820
GREECE

Argentina

Conarco Alambres Soldaturas S.A.
Calle 10 No 4079 Tel: +54 11 4752 7521
1672 Villa Lynch Fax: +54 11 4753 5751
Buenos Aires
ARGENTINA

India

Norinco Private Ltd
Nowaroji Mansion Tel: +91 22 284 2042
5th Floor Fax: +91 22 204 6576
31, Nathelal Parekh Marg.
P.O.Box 871
400 001 India

SALES

Croatia

Zeljko Vukovic
Vukovarska 162 Tel: +38 599 564 954
21000 Split Fax: +38 521 515 566
CROATIA

France

Piero Firmiano
13 Parc Mozart Tel: +33 442 23 4514
13100 Aix-en-Provence Fax: +33 44 296 6868
FRANCE

U.S.A

Syncrolift Inc
Two Datran Center Tel: +1 305 670 8800
Suite 102 Fax: +1 305 670 9911
9130 South Dadeland Blvd.
Miami,Florida
FL 33156-7850
U.S.A

Spain

DTA
C/musgo 2 Tel: +34 91 307 6063
2¤F, Edif.Europe II Fax: +34 91 3076470
28023 Madrid
SPAIN

SALES

Thailand

A & Marine (Thai) Co.Ltd
555 Mu 3 Taiban Rd. Tel: +66 2 703 5544
T.Taiban, Amphur Muang Fax: +66 2 703 5525
10280 Samutprakarn
Thailand

Far East

James Brown
40 Quincy Loop Tel: +61 8 930 40 205
6028 Iluka Fax: +61 8 930 42 464
P.O.Box 703
Joondalup 6919 Perth, WA
Australia

Korea

Chemiko Trading Co. Ltd
Chung-Nok Bldg 4th Floor Tel: +82 2 562 7861/5
721-29 Fax: +82 2 554 1284
Yeoksam - dong
Kan Seoul
Korea

Symbols	Characteristics	Symbols	Characteristics	Symbols	Characteristics
	Control by push-button	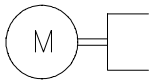	Control by electric motor		Control by lever
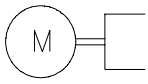	Electric motor	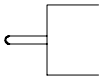	Control by plunger	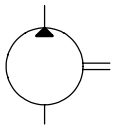	Hydraulic pump with fixed displacement and one flow direction
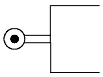	Control by plunger with roller	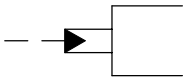	Control by increase of pressure via pilot valve	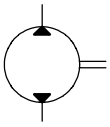	Hydraulic pump with fixed displacement and two flow direction
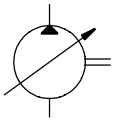	Hydraulic pump with variable displacement and one flow direction		Control by spring	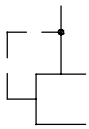	Internal control connection
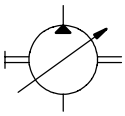	Hydraulic pump with variable displacement manually controlled	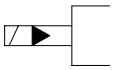	Combined control with electromagnetic pilot valve	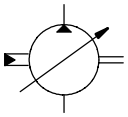	Hydraulic pump with variable displacement pressure controlled via pilot valve
	Control by electromagnet with one winding		Control, alternatively by electromagnet or pilot valve	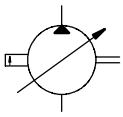	Hydraulic pump with variable displacement pressure compensated
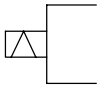	Control by electromagnet with two windings each working in separate directions	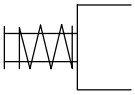	Control, manual or by spring return	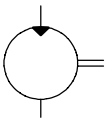	Motor with fixed displacement and one flow direction
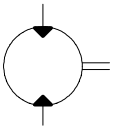	Motor with fixed displacement and two flow direction	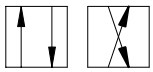	Valve position with two directions and shown flow directions	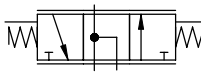	Directional control valve with two continuous variable orifice, three connections, pressure controlled and with spring return to neutral position.
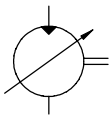	Motor with variable displacement and one flow direction		Valve position with one closed connection and two directions with shown flow directions	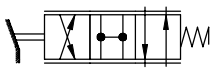	Directional control valve with four continuous variable orifice, four connections, mechanically controlled and with spring return (following valve)
	Valve position with two directions and interconnections	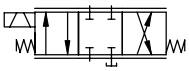	Electrohydraulic servo valve with direct control	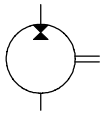	Pump/Motor with fixed displacement. Pump in one flow direction, motor in the other

Symbols	Characteristics	Symbols	Characteristics	Symbols	Characteristics
	Valve position with two closed connections and one direction with shown flow direction	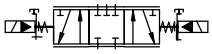	Electrohydraulic servo valve with pilot control and mechanical feed back		Pump/Motor with fixed displacement. Pump or Motor in one flow direction
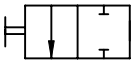	2/2 Directional control valve, manual controlled to both positions	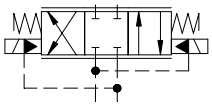	Elektrohydraulic servo valve with hydraulic feed back		Pump/Motor with fixed displacement. Pump or Motor in both flow directions.
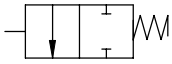	2/2 Directional control valve, pressure contr. and with spring return		Check valve with for the function negligible difference in opening pressure		Pump/Motor with variable displacement. Pump in one flow directions, motor in the other
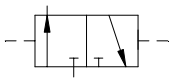	3/2 Directional control valve, pressure contr. to both position	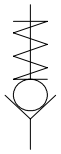	Check valve which demands some difference in opening pressure		3/2 Directional control valve, electro-magnetically controlled and with spring return
	Check valve with demands some difference in pressure for shut-off		Valve position with one direction and shown flow direction	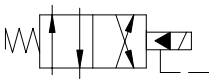	4/2 Directional control valve with electro-magnetically controlled pilot valve and with spring return
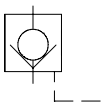	Pilot operated Check valve, controlled closing		Valve position with two closed connections	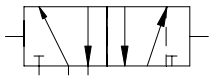	5/2 Directional control valve, pressure contr. to both positions
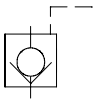	Pilot operated Check valve, controlled opening	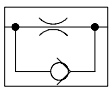	Check valve with orifice	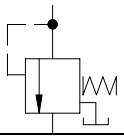	Sequence valve
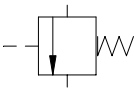	trottle valve, pressure controlled	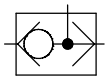	Switch valve (Double check valve)	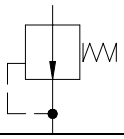	Pressure control unit without direct outlet, spring controlled
	Pressure control valve with the orifice normally closed	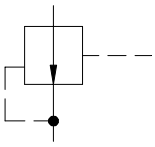	Pressure control unit without direct outlet pressure controlled	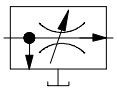	Flow regulator with variable adjustment and discharge of excessive flow
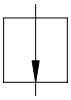	Pressure control valve with the orifice normally open	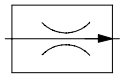	Flow regulator with fixed adjustment and discharge of excessive flow	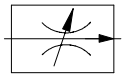	Flow regulator with variable adjustment and without discharge of excessive flow

Symbols	Characteristics	Symbols	Characteristics	Symbols	Characteristics
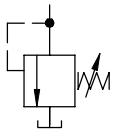	Pressure relief valve with adjustable setting	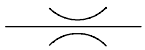	Orifice general symbol		Flow devider
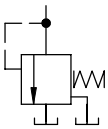	Pressure relief valve with separate drainage		Orifice viscous (laminar) characteristics	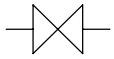	Shut-off valve
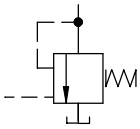	Pressure relief valve, external controlled	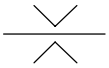	Orifice insignificantly depending on viscosity	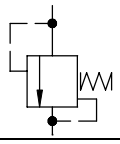	Differential pressure relief valve
	Trottle valve (simplified symbol)	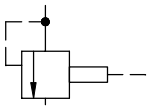	Proportional pressure relief valve		Trottle valve, manually controlled
	Atmospheric tank with one pipe ending above the fluid surface	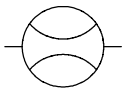	Flow measurement unit		Flexible hoses
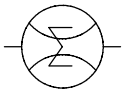	Flow gauge		Connections	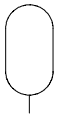	Accumulator
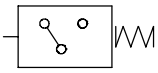	Pressure switch with double-throw contact		Crossing connections	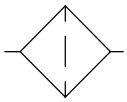	Filter, Strainer
	Venting		Plugged connection	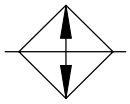	Cooler without indication of connections for the cooling medium
	Connections with joint connection	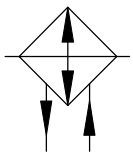	Cooler with indication of connections for the cooling medium		Quick coupling without valve
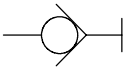	Quick coupling with closed valve	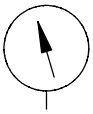	Pressure gauge	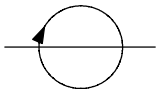	Swivel connection with one flow direction

REFERANCE SYSTEM

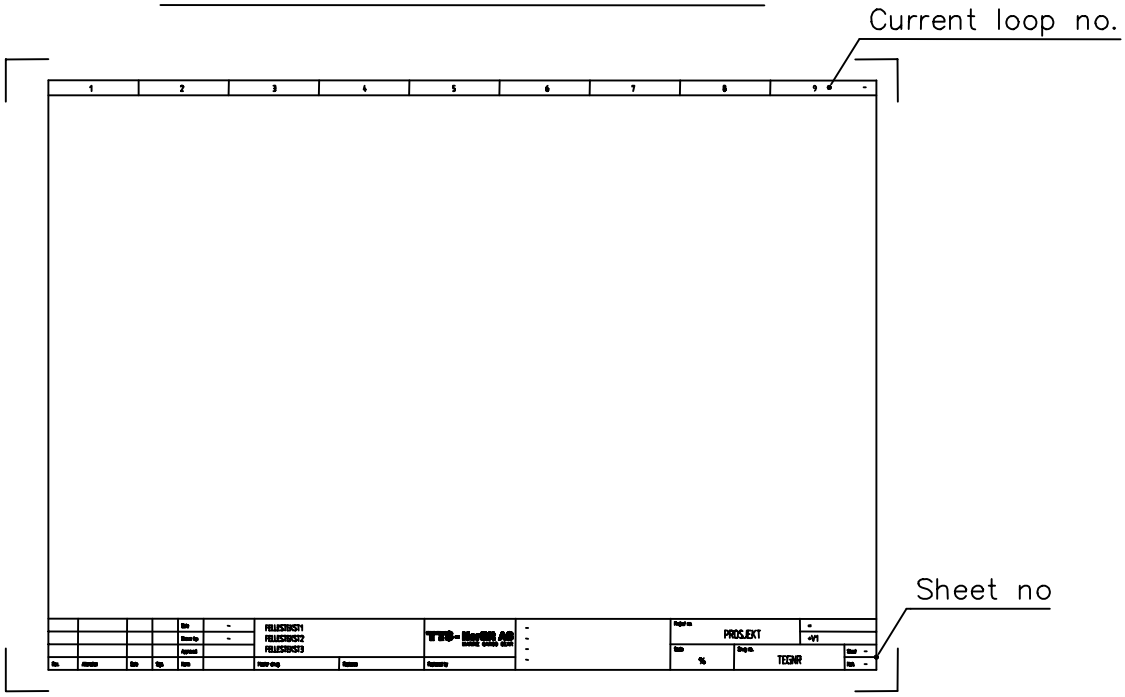

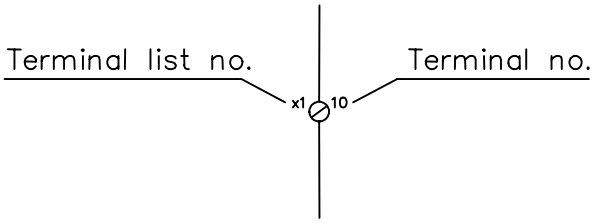

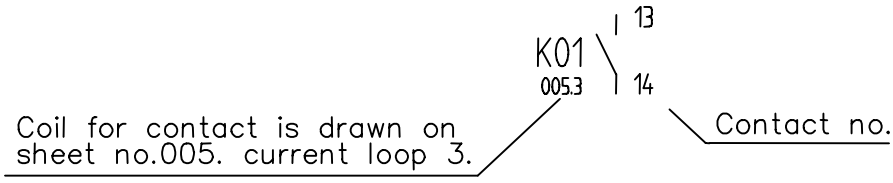

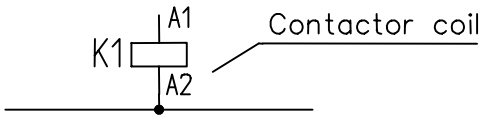

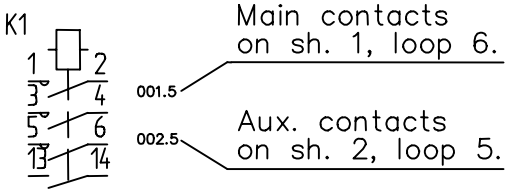

	Level switch Normally closed		Normally open ON–delay contact
	Level switch Normally open		Normally closed ON–delay contact
	Pressostate Normally closed		Normally open OFF–delay contact
	Pressostate Normally open		Normally closed OFF–delay contact
	Solenoid valve		Normally open switch
	Coil for Contact/relay		Normally closed switch
	Coil for ON–delay relay		Normally open selector switch
	Coil for OFF–delay relay		Normally closed selector switch
	Normally open contact		Normally open pushbutton
	Normally closed contact		Normally closed pushbutton

	Floodlight	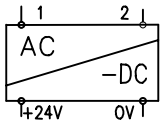	DC–power supply
	Light	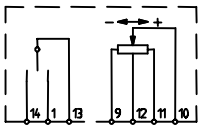	Controller w/potmeter
	Fluorescent tube	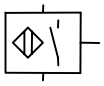	Proximity sensor 3–wire DC. Normally open
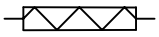	Heater	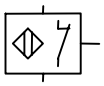	Proximity sensor 3–wire DC. Normally closed
	Diode		Proximity sensor 2–wire AC/DC. Normally open
	Resistor		Proximity sensor 2–wire AC/DC. Normally closed
	Pot–meter		Limit switch Normally closed
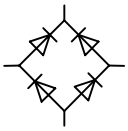	Rectifier		Limit switch Normally open
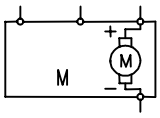	Window wiper	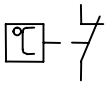	Thermostate Normally closed
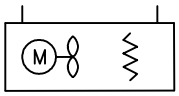	Heater with fan		Thermostate Normally open
		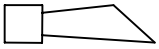	Alarm horn

	Conductor junction		Current transformer
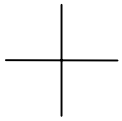	Crossed conductor, no connection	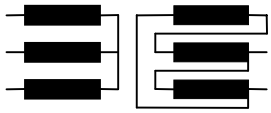	Three.phase transformer
	Slip ring with brush		
	Fuse		AM–Meter
	Circuit breaker		Hour meter
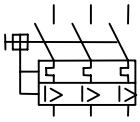	Circuit breaker		Motor
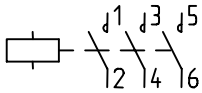	Contactor		Outlet
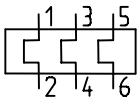	Thermal overload–relay		Plug/Socket
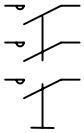	Disconnect switch	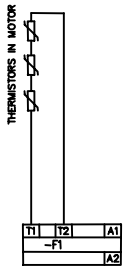	Thermistor relay
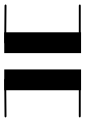	Single phase transformer		

GENERAL PURPOSE OFFSHORE CRANE

TECHNICAL SPECIFICATION

GENERAL:

CRANE TYPE	:	OFFSHORE CRANE, GPCFO 2000 - 5020
DRIVE SYSTEM	:	ELECTRO HYDRAULIC
DESIGN RULES	:	LRS CHAPTER 3, SECTION 3
TEMP. RANGE	:	AMBIENT TEMP. -20°C TO +45°C DESIGN TEMP. -10°C

PEDESTAL HEIGHT : 4,0 M

MAIN DATA:

	50T/15M	20T/20M	AUX
MAX LIFTING CAPACITY.....	50 T*	20 T*	10 T*
MAX OUTREACH.....	15 M	20 M	18,5 M
MIN OUTREACH.....	5 M		5 M
HOOK TRAVEL, MAX.....	500 M		500 M
HOOK SPEED			
Light load.....	70 M/MIN		100 M/MIN
Fully loaded hook.....	25 M/MIN		100 M/MIN
SLEWING SECTOR.....	360 DEGR		
SLEWING SPEED.....	0,7 RPM		
LUFFING TIME (AVERAGE UP/DOWN).....	70 SEC		
LIST/TRIM.....	5/2 DEGR		
WEIGHT.....	140 TON		

ELECTRIC DATA:

SHIP POWER SUPPLY..... 660V/50Hz/3ph

CRANE

MOTOR RATING

S1-100% ED.....	2x230 KW
S6-40% ED.....	2x340 KW
Enclosure.....	IP 55
Insulation class.....	F
Type starter.....	STAR/DELTA

NOTE: Weight and speed might vary within ± 5%

* Weight of wire rope will reduce the SWL during subsea operation.

1. CRANE CONTROL

1.1 The crane is provided with an operators cabin of steel welded design and equipped with windows of safety glass.
A special type of window gasket prevent the glass from being pushed through by heavy sea or wind.

The cabin is suspended on rubber vibration dampers and equipped with air conditioning, heater, lighting, window wiper and a comfortable chair.

The crane control is mounted on consoles in the cabin, left and right side of the chair.
All motions have stepless speed control from 0 to max.

The cabin control consoles also include:

- Start/stop of pump motor.
- Running lamp (green).
- Power available lamp (white).
- On/off switch for window wiper.
- On/off switch for cabin heater.
- On/off switch for cabin light.
- On/off switch for flood lights.
- Air conditioning control.
- Load monitor display with sea state setting.
- Depth monitor display.
- Warning horn.
- Warning light for low oil level.
- Warning light for high oil temperature.
- Warning light for high motor temperature.
- Selector switch by-pass low oil temperature and high motor temperature.
- Alarm off.
- Lamp test.

2. SAFETY SYSTEMS

2.1 Load Limiting system
All main hydraulic circuits are protected from overpressure by relief valves set to values corresponding to the crane capacity.

2.2 Hook stop
The hook movement will be automatically stopped in top and bottom position by limit switches.

2.3 Fail Safe Brakes
Both winch motor and slewing motors are provided with oversized fail safe brakes.
The brakes are spring operated and pressure released.

2.4 Load holding valves
Winch motor, hydraulic cylinder and slewing motors are all provided with load holding valves which will freeze the movement in case of hose rupture or other failure causing pressure drop.

2.5 Hydraulic cylinder stop
The hydraulic cylinders are provided with limit switches reducing speed before end positions are reached.

2.6 Constant moment limiting system for main winch.
The main winch is equipped with a moment sensing system generating a stop signal if hook load x arm, reach the allowed maximum value.

3. MACHINERY

3.1 Slewing machinery
Consist of a ball or roller bearing slewing ring seated on machined surfaces.
Slewing ring bolts and nuts are made from special alloy steel and tightened up to an exact tension.
The slewing rings are all provided with internal gearing.
Slewing motor, brake and gear are built together to one complete unit.

3.2 Hydraulic cylinders
The hydraulic cylinders are designed for marine use.

3.3 Hoisting machinery consist of:
- Grooved drum with roller bearings and brackets.
- Winch gear built into the drum with brake and hydraulic motor.
- Flange mounted load holding valve.
- Flange mounted hydraulic hook stop in top and bottom position.

The wire rope is of NON-ROTATING type and galvanized.
All wire sheaves are provided with double roller bearings on steel axles.
All bearings have grease nipple lubrication.

4. HYDRAULIC POWER PACK

4.1 Hydraulic Power Pack consist of two electric motors driving the pumps mounted inside in the machinery room.
The hydraulic oil circuits include full flow filters with changeable filter inserts.

4.2 Oil cooler
The crane is designed for continuos use in hot climate and provided with an oil cooler to keep the hydraulic oil temperature within acceptable limits.

4.3 Hydraulic pipes and hoses
All external mounted pipes are of stainless steel type.
Hydraulic hoses are made from rubber types with special good resistance against sea environment. All hose assemblies are tested with 50% overpressure before they are mounted on the cranes.

5. ELECTRIC SYSTEM

5.1 Pump motor

The electric pump motors are of marine type.
Type of enclosure IP55. Class of insulation "F".
Ratings are given based on 45°C ambient temperature.
Motor will be provided with anti-condensation heater for 220V.
Duty: S_6 - 40% ED.
Motors will be protected by thermic relay a therm-istors.

5.2 Star/Delta Electric starter

The electric starter panel located in the crane machinery house will include a star/delta starter for the main pump motor and necessary contactors, relays, fuses etc.
The starter will as standard include following features:

- AMP meter in panel door.
- Control power on/off.
- Hour meter.
- Cooler fan auto run.

6. STEEL STRUCTURE

6.1 All structural steel used in our cranes will be supplied with certificate 3.1.b. according to DIN standard.
The quality is selected in accordance with classification societies requirements, to obtain necessary ductility for the lower temperature design limit.
All important welds are carried out in accordance with welding procedures and NDT check before painting.

7. SURFACE TREATMENT

7.1 Exterior

Abrasive blast clean of all surfaces to SA 2,5, SIS 055900.

Primer:
Zinc rich epoxy, two pack. Interzinc 72.
Dry film thickness 30 - 40 microns.

Intermediate coat:
Two component epoxy. Intercure 420 HS.
Dry film thickness 125 microns.

Top coat:
Two component acrylic. Interfine 629 HS.
Dry film thickness 50 microns.

Interior crane and inside pedestal:

Abrasive blast clean of all surfaces to SA 2,5, SIS 055900.

Primer:

Zinc rich epoxy, two pack. Interzinc 72.
Dry film thickness 30 - 40 microns.

Intermediate coat:

Two component epoxy. Intercure 420 HS.
Dry film thickness 75 microns.

Top coat:

Two component acrylic. Interfine 629 HS.
Dry film thickness 40 microns.

Colour top coat: White

Ladders and platforms:
Will be supplied hot dip galvanized.

REV	ALTERATION	DATE / SIGN
1	RELEASED FOR CUSTOMER APPROVAL	FTU 10.01.0.1
2	CHANGE CG TO ~2300, OUTER JIB 15M CG ~2800	FTU 02.04.01
3	GENERAL UPDATED	FTU 06.04.01
4	GENERAL UPDATING	LIS 10.05.01

JIBS SHOWN WITH MAXIMUM OUTREACH OUTER JIB WHEN LEVEL INNER JIB

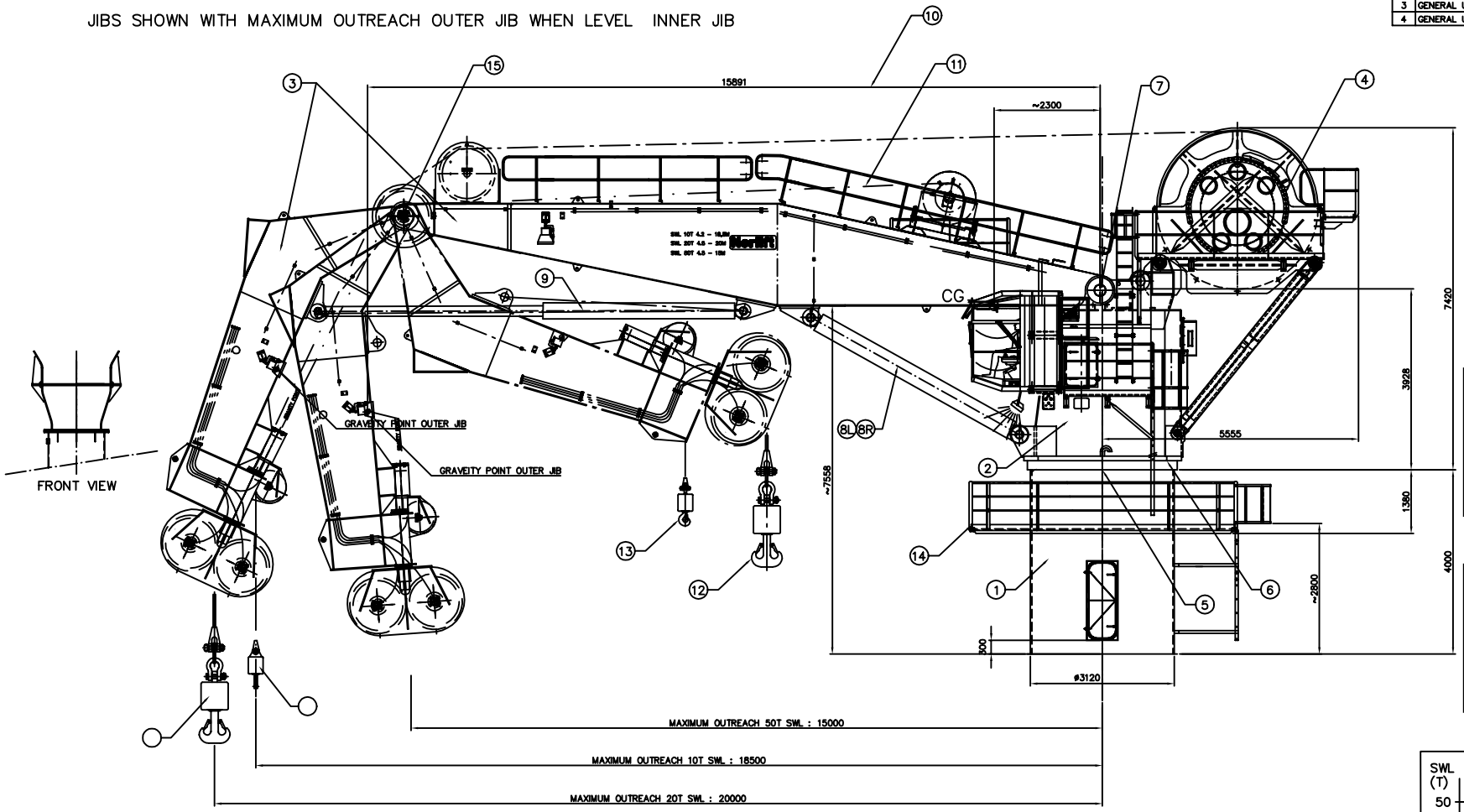

MAIN HOOK
LOADING :
LIGTHLOAD 20 T – 20 M
SWL LOAD 50 T – 15 M
LIFTING HEIGTH 500 M

AUX. HOOK
LOADING :
SWL LOAD 10 T – 18,5 M
LIFTING HEIGHT 500M
SPEED 100 M/MIN.

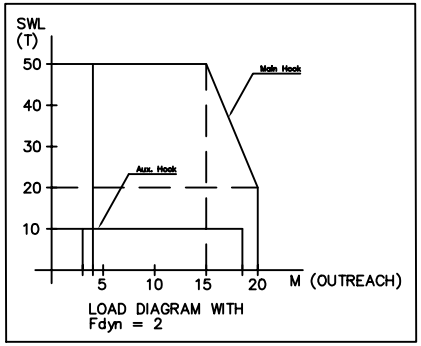

LOAD DIAGRAM WITH Fdyn = 2

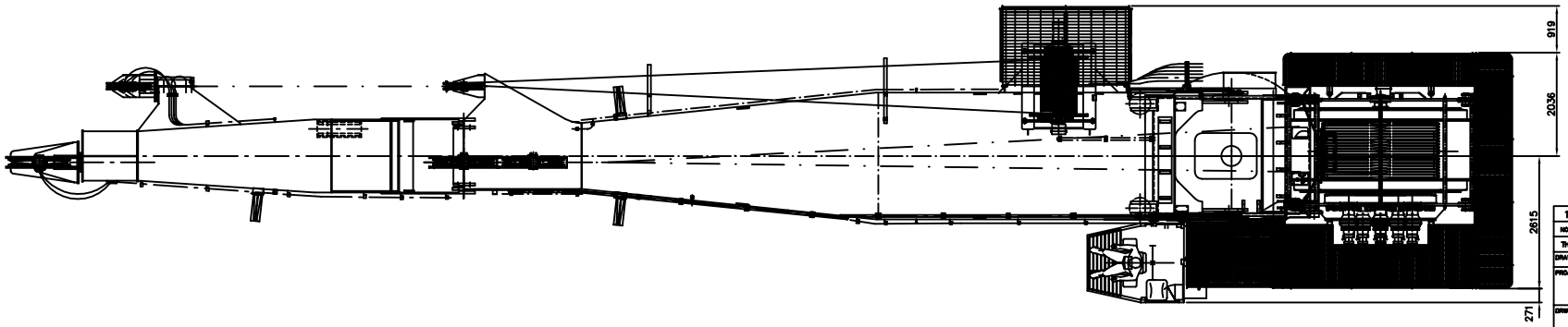

NOS	ITEM / DIMENSION	POS	MATR / DRWG / ART NO	WEIGHT
1	MAIN PART LIST	1	A4–9263	~123460

THIS DRAWING IS THE PROPERTY OF TTS–NORLIFT % AND MUST NOT BE REPRODUCED WITHOUT OUR WRITTEN CONSENT

DRAWN BY FTU 10.01.01 | CHECKED BY | APPR BY

PROJECT: CRANE 2078

TTS - Norlift AS
MARINE CARGO GEAR

DRWG NAME: GPCFO 2000 – 5020 ARRANGEMENT

SCALE 1:50 | E

DRWG NO A1–9761 REV 4

MASTER DRWG | REPLACED BY | REPLACES

REV	ALTERATION	DATE / SIGN
1	RELEASED FOR PRODUCTION	LIS 02.05.2001

TOTAL CRANE WEIGHT APPROX. [KG] 123460

NOS	ITEM / DIMENSION	POS	MATR / DRWG / ART NO	WEIGHT
	HYDRAULIC CIRCUIT DIAGRAM/HOSES	–	A1–9856	~200
	ELECTRIC DIAGRAMS	–	A3–10100	
		19		
		18		
		17		
		16		
1	JIB HINGE BETWEEN JIBS	15	A2–7709	
1	RING PLATFORM W/LADDER	14	A2–9728/A3–1082	596
1	SWIVEL HOOK 10T	13	A3–9407	250
1	SWIVEL HOOK 50T	12	A3–7619	1250
1	HOISTING WIRE–AUX. ø28 L=530M	11		2000
1	HOISTING WIRE–MAIN ø54 L=570M	10		7100
1	FOLDING CYLINDER HINGE ASSEMBLY	9	A3–9309	4019
1	CYLINDER HINGE ASEMBLY	8L	A3–1162	3909
1	CYLINDER HINGE ASSEMBLY	8R	A3–1163	3909
1	JIB HINGE ASSEMBLY	7	A1–10021	286
1	SLEWING MACHINERY ASSEMBLY	6	A3–9069	4633
1	PUMP DRIVE ARRANGEMENT	5	A2–7707	2500
1	WINCH PLATFORM ARRANGEMENT	4	A1–10074	26940
1	INNER/OUTER JIB ASSEMBLY	3	A1–10120	37100
1	SLEWING COLUMN	2	A1–9819	19475
1	BASE COLUMN	1	A1–9721	9141

THIS DRAWING IS THE PROPERTY OF TTS–NORLIFT % AND MUST NOT BE REPRODUCED WITHOUT OUR WRITTEN CONSENT

DRAWN BY LIS 02.05.2001	CHECKED BY	APPR BY

PROJECT

CRANE NO.: 2078

TTS - Norlift AS
MARINE CARGO GEAR

DRWG NAME

MAIN PART LIST
GPCFO 2000–5020

SCALE 1:1

E

DRWG NO A4–9263 REV 1

MASTER DRWG	REPLACED BY	REPLACES

REV	ALTERATION	SIGN / DATE
1	RELEASED FOR PRODUCTION	LIS 02.05.2001

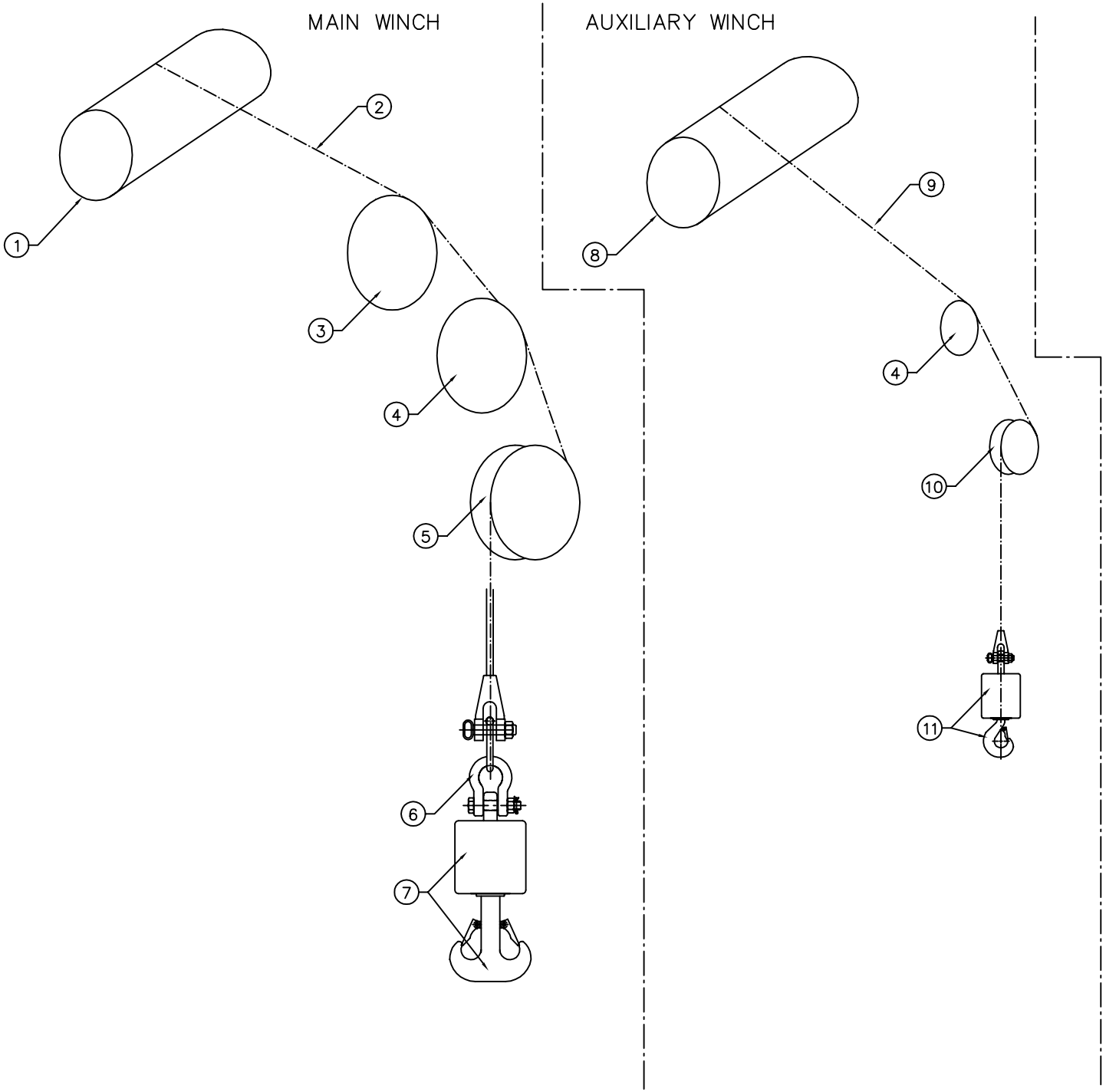

TOTAL WEIGHT [kg] ~41750

NOS	ITEM / DIMENSION	POS	MATR / DRWG / ART NO	WEIGHT
1	SWIVEL HOOK ASSEMBLY 10T	11	A3–9407	~250
1	JIB HEAD AUX	10	A2–8260	925
1	WIRE ROPE ø28 L=530M	9		~2000
1	WINCH ASSEMBLY 10T	8	A1–9815	~2350
1	HOOK BLOCK WITH SWIVEL 50T	7	A3–7619	~1250
1	H–SHACKLE 85T	6		~25
1	JIB HEAD MAIN	5	A1–10076	2485
1	ARRANGEMENT WIRESHEAVES BETWEEN JIBS	4	A3–10212	~535
1	JIB HEAD ON JIB ASSEMBLY	3	A2–8263	~1544
1	WIRE ROPE ø54 L=570M	2		~7100
1	WINCH ASSEMBLY 50T	1	A1–9806	23270

THIS DRAWING IS THE PROPERTY OF TTS–NORLIFT % AND MUST NOT BE REPRODUCED WITHOUT OUR WRITTEN CONSENT

DRAWN BY LIS 02.05.01 | CHECKED BY | APPR BY

PROJECT: M/V "SEIS RANGER" CRANE 2078

TTS - Norlift AS
MARINE CARGO GEAR

DRWG NAME: LOOSE GEAR REEVING ARRANGEMENT

SCALE: 1:25 E

DRWG NO: A2–8301 REV 1

REPLACES | REPLACED BY | MASTER DRWG

SPARE PARTS & TOOL LIST

Shipname : M/V "SEIS RANGER"
Yard : Mjellem & Karlsen
Crane type : GPCFO 2000-5020
Crane no. : 2078

SPARE PARTS

Description	Q'TY / Crane
Filter Element	1 pcs.
O-Rings for pump ø419,3x5,7	1 Set.
O-Rings for pump ø152x3,53	1 Set.
Lifting lugs for El. Motor	1 Set.

TOOL LIST

Description	Q'TY / Ship
Wooden case w/lock & key	1 pcs.
Pressure gauge 400 Bar	1 pcs.
Pressure gauge 60 bar	1 pcs.
Manometer hose 80 cm.	1 pcs.
EMC Pump w/hoses	1 set.

CHECK LIST BEFORE START-UP

1) Check oil level.

2) Check that control levers / joysticks are in neutral

3) Check wire rope.

START-UP

1) When starting up at low temperature, less than + 10°C, the oil temperature should be lifted up to + 10°C before crane is used.

2) If crane have special aggregate for heating the hydraulic oil, this aggregate must be switched on and run for a time to lift oil temp up to min. 0°C before main pump is started.

3) Cranes not having special heating aggregate should be started and run on idling condition until temperature is lifted to +10°C.

CRANE OPERATION

1) Check that hoist wire run correctly through the wire sheaves.

2) Check functions of limit switches.

3) Move handles and joysticks gently.

4) Follow instructions on the crane or in the crane cabin.

CRANE PARKING

1) Park the crane with the jib in the jib support.

2) Secure hook block and tight wire. Do not overtight !!

3) Stop pump motor.

4) Check that motor still stand heat is on.

This crane has been designed for emergency operation in case of loss of power.
Two persons must attend for EM Operation, one always observing the load.

Ref.: Hydraulic diagram, see section 4.

Lowering of winch

1) In order to carry out EMC-lowering a hand pump and hoses equipped with quick connections is delivered together with the crane.

2) Connect suction hose from pump to quick connection 409 on tank in engine room. Connect pressure hose to quick connection 408 located in the hoisting brake circuit.

3) **Close** shut off valve 106 mounted near hoist pumps in drain line from charge relief valve.

4) **Open** bypass valve 107 (157) mounted at the flushing valve 126 in the hoisting circuit.
Close bypass valve 113 (163) mounted on the winch.
Close shut off valve 110 (160) located below in the hoisting brake circuit.
(Number in parenthesis is for aux. Winch).

5) Valve 114 (164) (brake dump) mounted on winch must also be activated. Use a small screwdriver or a similar tool to keep the small rod in center of solenoid pressed in.
On some valves the movements is 3 – 5 mm on other models less than 1 mm.
An extra man is needed for this action.

NOTE! Reverse the operation of valves mentioned in 3) and 4) as soon as mission is carried out.

6) Start pumping. When the pressure is high enough (abt. 25-30 bar) the winch will slowly start lowering. Lowering will stop when pumping is stopped.

Slewing

1) Connect hand pump to 409 on oil tank and 308 located in the slewing brake circuit.
Secure jib against slewing before applying pressure on brake.

2) **Open** valve 302 mounted at the flushing valve 326 in the slewing circuit.
Close valve 319 located near 308 in the slewing brake circuit.

NOTE! Manometer can be connected at 408 to monitor pressure.

3) Rise pressure from hand pump to release brake on slewing gears.

4) Pull jib into position with force on the jib end.

Lowering of jib

Open valve 208 inside located on left forward in crane house. Via orifice 207 oil will flow back to tank and jib will lower at low speed.
Close valve 208 after use.
Emergency lowering of jib must be done with great care.

START - STOP OF HYDRAULIC PUMP MOTOR

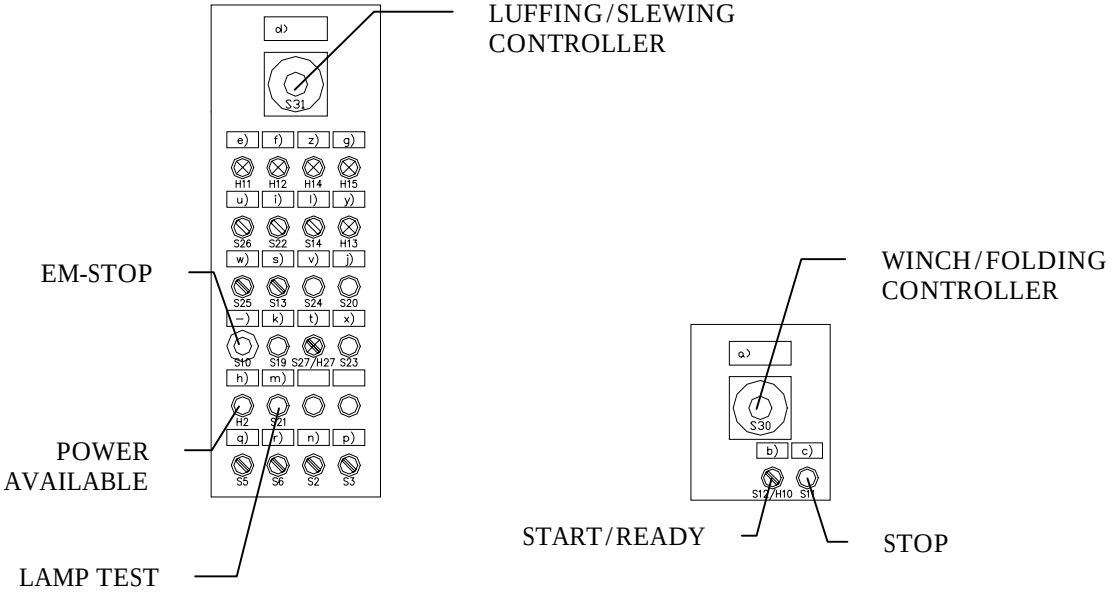

Joystick in neutral
Check that joysticks are in neutral position.
Check that EM-stop push-button is released. (Turn knob acc. to arrows).

Power on crane
POWER AVAILABLE light illuminate, power is connected to the crane.
Press pushbutton LAMP TEST, and check that all lights are working.

Start
Operate push-button START and wait until light illuminate before operating the joysticks.

Stop
Operate push-button STOP. Pump motor will now stop and DC-power disable.

EM-stop
Cut all control power on the crane.

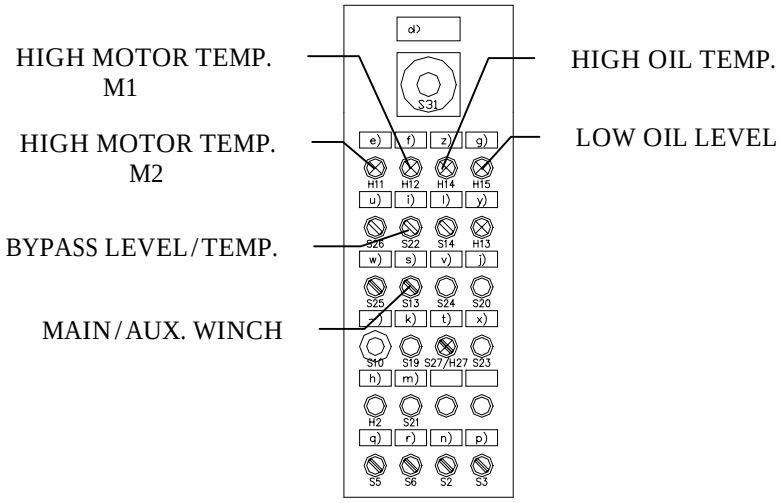

High motor temperature M1
If motor temperature rise above limited value, pump motor stops, and light illuminate.
Restart of crane is possible after dark pilot light.

High motor temperature M2
If motor temperature rise above limited value, pump motor stops, and light illuminate.
Restart of crane is possible after dark pilot light.

High oil temperature
If the temperature of the hydraulic oil rises above the maximum permissible value of 75°C, pilot light will illuminate, and DC-power to vales cut off. Pump motor and oil cooler will be running to reduce the temperature as quickly as possible. Further operation is possible when pilot lights go dark.

Low - low low oil level
If the oil level in the hydraulic oil tank drops below the minimum permissible level, a float level switch energises the alarm system.
If the level drops to low low level, pump motor stops.
Both high oil temp. and low oil level operates the alarm horn outside the cabin. Operating push-button ALARM OFF can reset audible alarm.

If pump motor stops due to low low oil level it is possible to restart the motor and place the load on a safe area.
Check that there is not an extreme leakage.
Turn key-switch in position BY-PASS (this switch has spring return and has to be operated during by-pass). Start pump motor and place the load.
When the key is released, the pump motor will stop. Refill oil.

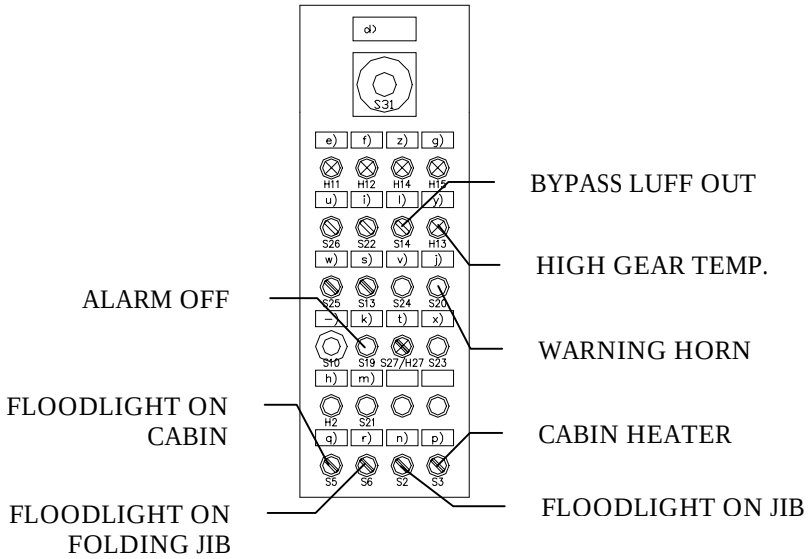

Alarm horn
A push-button ALARM HORN allows the operator to warn people on deck.

By-pass luffing out
Luffing out stops at a level when the jib will not make any collision with parking rest.
During parking of crane, push-button should be operated together with luffing joystick to be able to lower the jib in parking rest.

High gear oil temp.
If temperature of gear oil rise above allowed level, pump motor will stop, and pilot light illuminate.
Restart of pump motor is possible when oil/gear has cooled and light gone dark.

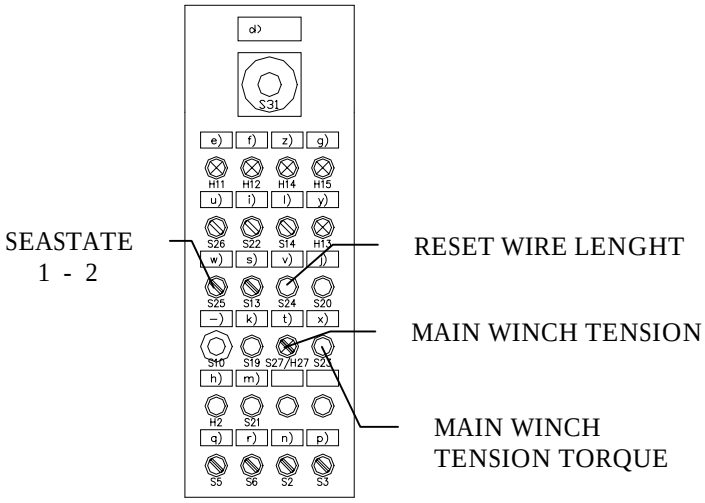

Reset wire length

Wire length reading is automatically reset to 0-value when hook is in top position. Monitor shows 2-wire length, total and corrected. Pushbutton RESET WIRE LENGTH
Should be operated when load reach sea level. Monitor will now show total length and
Length from sea level.

Tension / Tension OFF - ON

The crane is equipped with a tension system. This can be activated by operating pushbutton “START TENSION”. A pilot light in the pushbutton will illuminate to confirm that winch is in tension.
To reset tension, PULL WINCH JOYSTICK IN HOIST DIRECTION.
Tension force can be adjusted on potentiometer TENSION.
Before starting tension, turn potentiometer to min. force. Start tension and adjust force to a sufficient value.
DON’T START TENSION WITH TOO HIGH VALUE OR LOAD WILL BE HOISTED.

Sea state

Different sea states can be selected on selector switch.

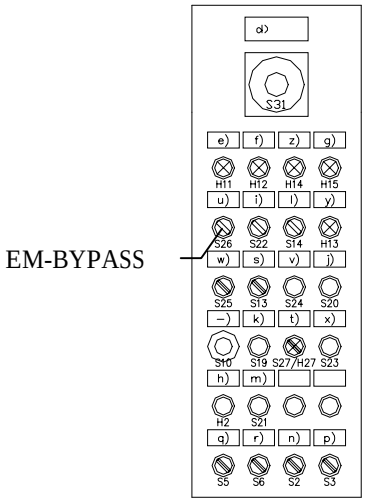

EM-Stop by pass.

If actual load exceed 115% or any fault occurs in the system, all movements goes to a complete stop, and can be bypassed by key switch to be able to move main/folding jib to a better position. Check lower part of display for Alarm messages.

Key for this switch must only be operated under supervision of person responsible for lifting operation. Load and operation condition must be considered according to actual Load Chart.

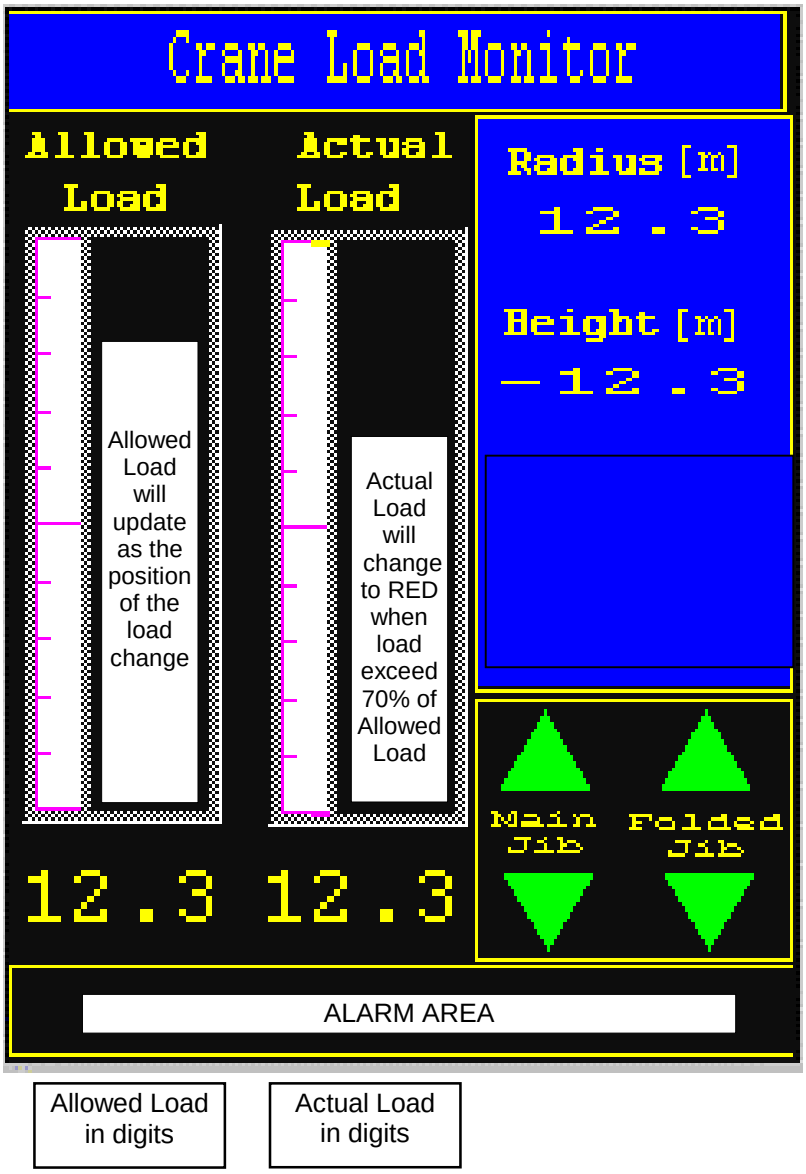

Type Proface GP370

Radius measured from centre of crane to jib head.

Height measured from main deck to jib head.

Allowed jib movement
Green is OK direction
Red locked direction
Shifts if limit is reached

Alarm area in case of failure in the over load system check this line for error messages in red text

---

Allowed jib movement Arrows for main/folding jib are normally green. If limit stop for overload is detected, one or more of arrows turn red. Further movement is then only possible in the same direction as green arrow. This direction will then increase the allowable load and operation can continue.

NOTE! If all arrows are red, lower the load.

NOTE! If all arrows are red, and Alarm messages are displayed indicating errors in the Load Limit system, the EM-STOP BY PASS key switch can be operated to be able to bring the crane/load back into safe position.

Check if the situation occurred due to overload or error in system. Then continue operation with the crane in better position ref. the actual load chart.

Key for this switch must only be operated under supervision of person responsible for lifting operation. Load and operation condition must be considered according to actual Load Chart.

Normal oil level.

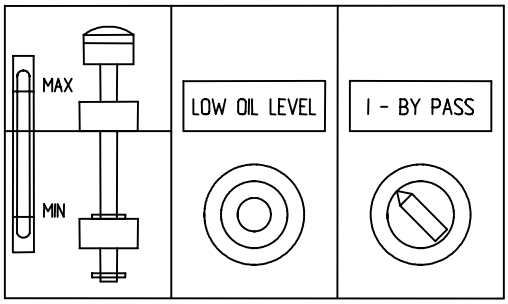

Normal oil level between marks Min. and Max.
Warning lamp LOW OIL LEVEL is extinguished.
Selector SWITCH must be in the position shown.

Oil level min.
When, for some reasons, the oil level drops to MIN, the upper float switch responds, and lamp LOW OIL LEVEL goes on. At the same time the alarm bell of the crane sounds.

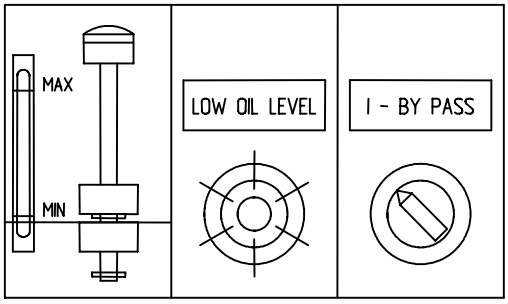

Oil level MIN. continued operation in a emergency, the operation of the crane may be continued for a short time provided that there is no important leakage of oil. In this case, press push-button ALARM OFF, the horn will be silent, and lamp, LOW OIL LEVEL goes out.

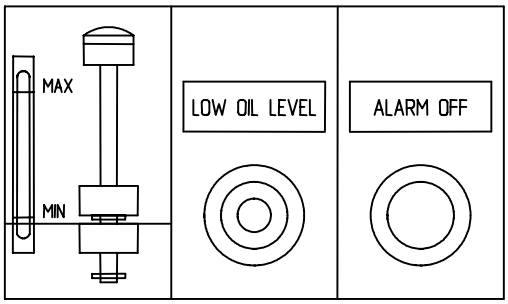

Oil level below MIN.
When the oil level has dropped a certain distance below MIN level the lower float responds and stops the crane, and lamp LOW OIL LEVEL goes on.

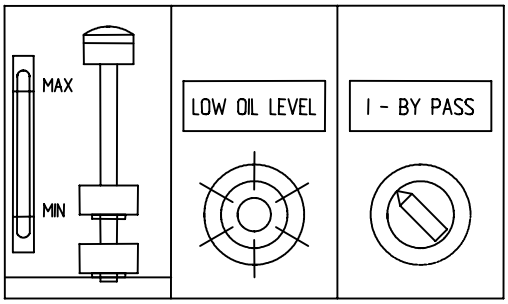

Oil level below MIN, emergency operation.
In the extreme emergency, e.g. if the crane has stopped with a load suspended on the hook, the crane can be started and operated if selector SWITCH is turned to position BY-PASS. The lamp alarm horn of the crane sounds. This is permissible if no important leakage is present, but is entirely at the risk of the crane-man or the officer who gives the order.

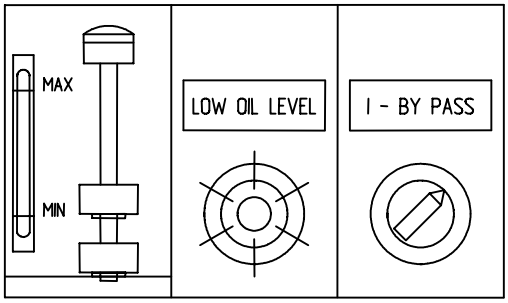

Testing oil level float switch.
The float of the oil feeler is fitted with built-in magnet which brake control circuit when the oil level drops below certain levels. The function of the float is preferable tested on the occasion of oil changes or tank cleaning. For the purpose of this test, the main switch will have to be terminally switches on.

LIFTING OPERATIONS SHOULD BE BASED ON THE FOLLOWING GUIDELINES GIVEN BY NMD AS A RECOMMENDATION

NMD Guide lines and Notes No. 17

1. General
During lifting by crane which may involve large dynamic loads the operational limitations shall ensure that the load including the dynamic additions mentioned below never exceeds the certified safe working load for the crane equipment and that major uncontrolled movements of the load involving risk damage or danger are avoided.

2. Documentation
Operational limitations for use onboard during lifts under dynamic conditions shall be submitted to the Norwegian Maritime Directorate. It shall also be made clear how the lift operation can in theory be accomplished without exceeding the crane's SWL and how it can safely be terminated in the case of normally deteriorating weather or malfunctions in the equipment as mentioned in paragraph 5.3 in these guidelines.

The operational limitations shall be substantiated by analysis following these guidelines or the equivalent or by reference to lifts similarly documented and executed in the past.

3. Dynamic additions when the load is in the air
Calculations for the dynamic additions to wire tension are to be based on :
-wave-induced movements of crane vessel
-acceleration during operation of winch
-any shocks caused when lifting onto or from another vessel
-equipment for limiting tension and load movements
-flexibility of crane and lifting wires

4. Dynamic additions when the load is in water
Calculations for the dynamic additions to wire tension are to be based on :
-wave-induced movements of the crane vessel
-equipment for limiting tension and load movement
-hydrodynamic characteristics of the load (drag and additional mass)
-force of wave on load
-acceleration during operation of winch
-flexibility of crane and lifting wires

5. Remarks on the dynamic effects e.t.c.
5.1 Hydrodynamic characteristics.
The movements of the vessel shall be calculated using recognised methods or discovered through testing of models. Forces brought into play wen the load passes through the splash zone shall be evaluated separately.

When analysing the hydrodynamic characteristics of the load, the effect of hydrodynamic additional mass and drag force from oscillating movements are to be included. The latter can deviate greatly from drag forces in a steady current.

5.2 Significance of speed of winch and stress caused by shocks.
The speed of the winch is of particularly great significance for the dynamic conditions during lifts in water in the case of loads of more or less neutral buoyancy to which strong drag forces are applied.
In these cases analyses are required both of the conditions at zero winch speed and of the conditions at maximum speed during lowering and, if applicable, hoisting. Stress caused by shock or similar movements shall be represented in the analysis in a conservative manner. If the crane is equipped to limit maximum tension, stress caused by shock and acceleration from operation of the winch can be accounted for by a load factor (see paragraph 5.3). Clear limits for lifting must in this case be set, related to wave conditions and the capacity of the equipment used to limit tension.

5.3 Equipment for limiting tension and load movements; constant tension winches. The effect of any equipment for limiting maximum tension and load movement (e.g. hoist compensator, elastic slings, etc.) can be taken into account in the calculations. The method of operation on which the calculations are based (e.g. included in the load factor) is to be verified. The likelihood and consequence of malfunction in this equipment during operation must be taken into consideration by the owner and accepted by the Norwegian Maritime Directorate. The above also applies to constant tension winches.

5.4 Landing on the sea bed/berthing of equipment.
The Directorate can in special cases demand documentation showing that load movement when landing on the sea bed/berthing of equipment is acceptable as far as stress caused by shocks is concerned.

6. Requirements for calculations and data basis.
Calculations are to be made according to accepted methods or using a type-approved analysis program, carried out by schooled personnel trained in the use of the program.

The Directorate can demand that special analyses or experiments be carried out to decide the hydrodynamic characteristics of the load.

7. Criteria for evaluation.
It is assumed that the crane always satisfies current regulations for deck cranes on mobile offshore units and that only exact or conservative mathematical methods are used in the dynamic calculations specified in these guidelines.
Uncertainly in calculation of load/hydrodynamic modelling shall be adjusted by the use of partial safety factors in compliance with approved codes.
Assuming the above conditions are observed, the following criteria can then be used as a basis for the evaluation of operations under given weather conditions based on analysis results:

$T_0 + Td < SWL$

$T_0 - 1.1\ Td > 0$
(no slack in the lifting wire is desired)

$1.1 \times S < D$
where

T_0 =Static load on hook

Td =maximum dynamic load amplitude on hook

SWL =certified lifting capacity of crane/lifting equipment

S =maximum movement amplitude of the load, possible maximum speed amplitude

D =design value; upper limit set by shocks e.g. against ocean bed, base section hoist compensator against sea bed, etc.

Usually the calculation of the maximum value of amplitude shall be based on the maximum value which, on average, arises once during a two-hour period.

Longer periods should be used for operations which take a long time to complete. The period should then be 4 times the calculated time-span for completion of the lifting operation.

In the case of amplitudes evaluated against design value (D) for hitting the seabed, etc. the above may be somewhat conservative (because the shock phase itself is of limited duration and it is often possible to avoid entering the phase when there is considerable movement of the vessel). In these circumstances, the length of the period can be determined in each separate case, dependent on the consequences of exceeding the design value.

Ref. Hydraulic Diagram A1-9856

General

The hydraulic power pack is in slewing column/pedestal. The tree main pump is driven via a spreader gear from the electric motor and there are two identical units each with capacity to operate crane with full load but half speed.
The pump stacks consists of one 125 ccm variable volume pump for slewing operation and one 229 ccm for winch operation as closed loop system. The third pump is fixed volume for open loop system and serves luffing/folding function.

Hoisting circuit

The hoist system is as mentioned a closed loop principle and is mainly served by pump 101, 1 and 2 and motors 106 (5 pcs.) Hoist pump is equipped with internal gear feed pumps, servo valves and piston. Adjustable shock and pressure cut off valves in each working line. Adjusted to ~120 bar on lowering side and suit SWL load at appr. 310 bar on hoisting side. Winch motors are variable axial piston bend axis type driving the winch via a planetary 3-stage gear with brake and pinion again driving drum via a slewing gear rim. Flushing valves are internally in pumps.

The winch motors are all provided with load control valves 103, which give better performance on load handling and greater safety.
The distributor block 141 will shift hoist pump flow between main winch and aux. winch. Pilot valve 142 operates this block and will with power on set system for operation of main winch. I.e. power off will set aux. winch.

Pilot valve 120, 121 provides opening of the brake when lifting/lowering.
Check/throttle unit 125 in brake line provides a slight delay in brake opening. Valves 104, 107, 109, 110, 113 and connector 408 are important items for performing emergency lowering (see chapter 3).
Hoist circuit is surveyed by HP switch 129 (S18) which take care of max. pressure and functions as overload protection. Near winch is LP switch 130 (S17) for feeling of low pressure in lowering line located. Reaction on the switch will put on brake via valve 114 (brake dump) and also the normal brake valve 121.

The auxiliary winch with motor 156 works in principle the same way as main winch. Main difference is one motor with fixed displacement. Load control valve is 153 and have same purpose as on main winch.

Pilot valve 170, 171 provides opening of the brake when lifting/lowering.
Check/throttle unit 175 in brake line provides a slight delay in brake opening. Valves 154, 157, 159, 160, 163 and connector 408 are important items for performing emergency lowering (see chapter 3).
Hoist circuit is surveyed by HP switch 129 (common with main) (S18) which take care of max. pressure and functions as overload protection. Near winch is LP switch 180 (S11) for feeling of low pressure in lowering line located. Reaction on the switch will put on brake via valve 164 (brake dump) and also the normal brake valve 171.

Hoist pilot system
Attached to hoist pumps are small gear pumps 140, which via shuttle valve 147 charge accumulator 144. Unloading valve 146 controls the charge pressure to ~ 200 bar and discharge pumps 140 to tank. Pressure switch 145 does the surveillance of this circuit. To low pressure level will stop the crane. Pilot valves 134 for main hoist and 184 for aux. hoist is used to open load control valves 103 and 153 opening via shuttle valves 115 (main) and 165 (aux.). Such opening is necessary to perform for tension mode and for lowering to deep water to save energy and avoid overheating of oil. Check/throttle valve 148 may be used for drainage of accumulator in connection with service work.

Hoist tension system
Tension is possible to achieve on both winches by using “ventilation” port V on pumps and regulate tension force with doing this “ventilation” through prop. pressure valve 504 (Y18). Valve 503 is used for connecting vent. ports V to this system. When tension is triggered on 503 must the respective brake and load control valve (main or aux.) be operated at the same time.

Slewing circuit
As for the winch is the slewing served by a closed loop system. Pump s 301 has adjustable shock pressure cut off valves in both sides set to ~300 bar. The flushing valve for slew. circuit is 322 and is providing exchange of oil. Pilot valve 321 mounted on the same base as valve 121 for winch, provides opening of slew. brakes in the three slew. gears 309. The three fixed motors 307 is operated from pumps 301 and gives motion in selected direction. The quick connector 408 and ball valves 302 and 319 make brake opening and emergency slew. motion possible. (See chapter 3).

Luffing circuit
Luffing circuit is arranged as an open loop with fixed pumps 201. Oil for lifting of cylinders 205 goes from pump 201 via valve 202 A and B and through check valves in load control valves 204. An equalizer line is fitted between the cylinders and a pipe rupture valve 203 is built into each cylinder near connection for this line. From equalizer line inside crane house is a drain valve 208 that via an orifice 207 can be used for emergency lowering of jib. (See chapter 3).
Lowering of the cylinders goes after the similar procedure but in addition is the pilot pressure on valve 202 spool A and B taken out to open the load control valves 204. Pump flow is lead to top of cylinders.

Folding circuit
Folding is also an open loop circuit and is served by the same pumps (201) and valve block (202) as luffing circuit.
Spools C and D is used for folding. Folding cylinder is 501 and this cylinder has a load control/shock valve mounted in each end (502 and 503). These load control valves is opened with direct pilot from cylinder’s opposite side.
The shock valve integrated in 502 and 503 is possible to use for emergency lowering of folding jib, but access is difficult.

Common equipment

The feeding pumps flow, built into slewing pumps 301 is gathered through filter 419 relive valve 411 and feedback to pumps. The pressure switches 410 (S11) have a surveillance task for the fed pressure and shall be set at ~14 bar. The normal feed pressure shall be ~30 bar. After having passed the feed pressure valves in the pump the feed flow lead through pump housings and form there to the internal mounted cooler 406. A spring loaded check valve 214 gives a cold start protection for the cooler. Filtration is done in pressure filter 419 and tank-mounted filters 402. Oil filling to take place through quick connector 401 and consequently through filter.
Feed pressure can be adjusted with relive valve 411 for slewing circuit.

Additional cooler is arranged on the return line from luffing/folding circuit. (407)
Spreader gear oil is also cooled. Small pumps, 702 on each power pack circulate the oil from each gearbox through cooler 706 mounted outside. This is the small cooler with divided element. (50% pr. Gearbox).

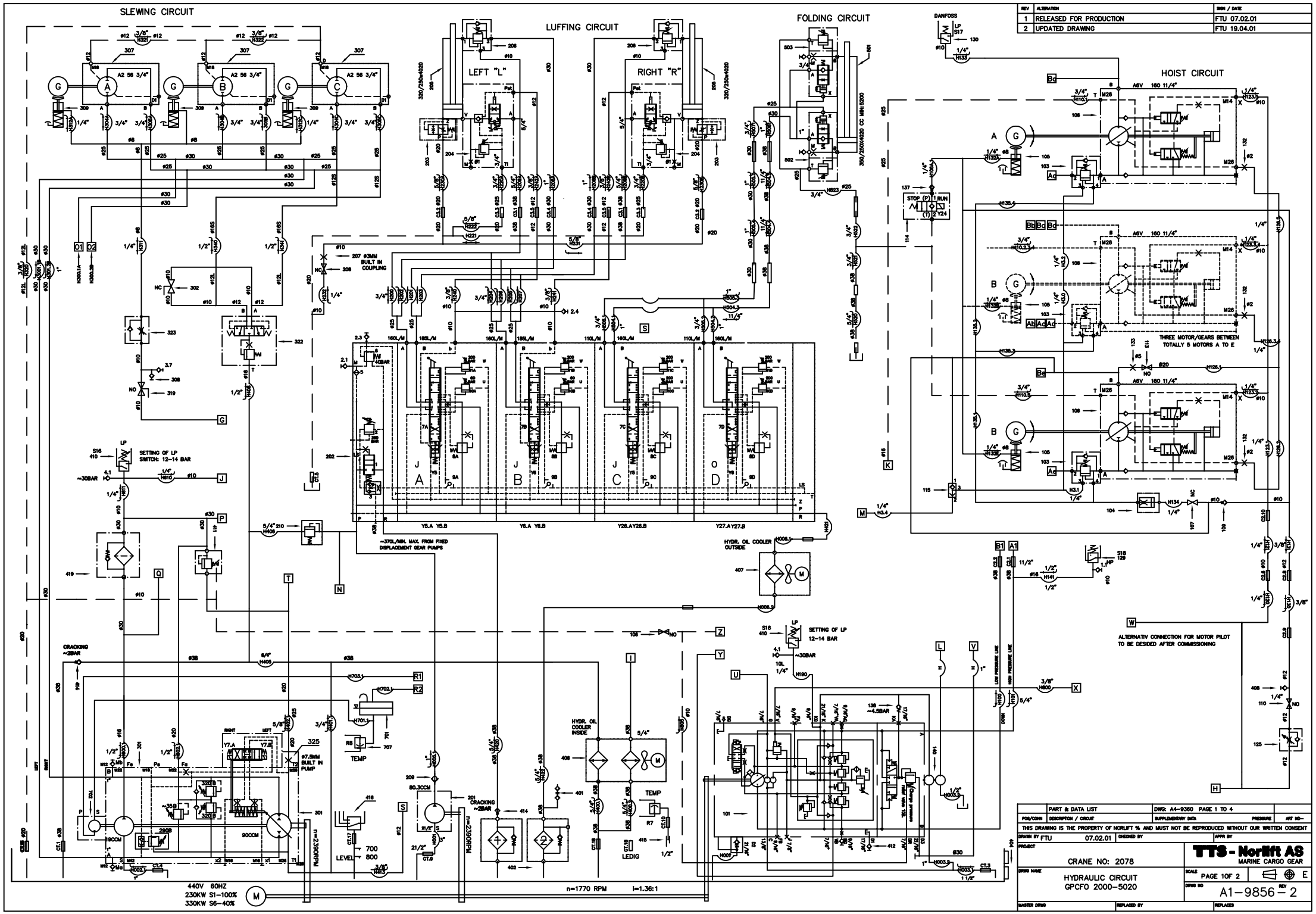

REV	ALTERATION	SIGN / DATE
1	RELEASED FOR PRODUCTION	FTU 07.02.01
2	UPDATED DRAWING	FTU 19.04.01

PART & DATA LIST — DWG: A4-9360 PAGE 1 TO 4

POS/CONN | DESCRIPTION / CIRCUIT | SUPPLEMENTARY DATA | PRESSURE | ART NO—

THIS DRAWING IS THE PROPERTY OF NORLIFT % AND MUST NOT BE REPRODUCED WITHOUT OUR WRITTEN CONSENT

DRAWN BY FTU 07.02.01 | CHECKED BY | APPR BY

PROJECT: CRANE NO: 2078

DRWG NAME: HYDRAULIC CIRCUIT GPCFO 2000-5020

TTS - Norlift AS
MARINE CARGO GEAR

SCALE: PAGE 10F 2 | E

DRWG NO: A1-9856 — 2 | REV

MASTER DRWG | REPLACED BY | REPLACES

REV	ALTERATION	SIGN / DATE
1	RELEASED FOR PRODUCTION	FTU 07.02.01
2	UPDATED DRAWING	FTU 19.04.01

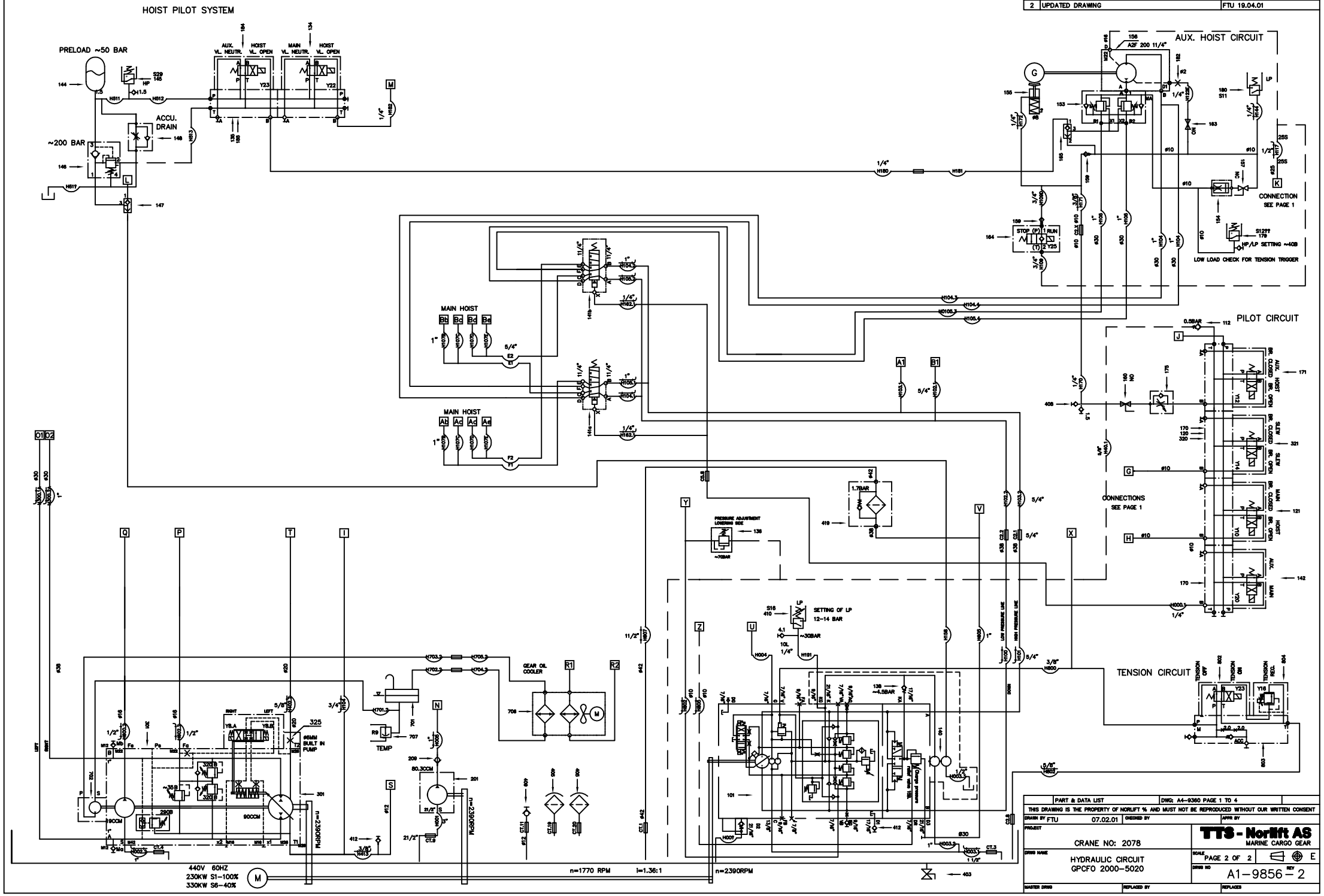

PART & DATA LIST	DWG: A4-9360 PAGE 1 TO 4

THIS DRAWING IS THE PROPERTY OF NORLIFT % AND MUST NOT BE REPRODUCED WITHOUT OUR WRITTEN CONSENT

DRAWN BY FTU 07.02.01 | CHECKED BY | APPR BY

PROJECT: CRANE NO: 2078

TTS - Norlift AS
MARINE CARGO GEAR

DRWG NAME: HYDRAULIC CIRCUIT GPCFO 2000-5020

SCALE: PAGE 2 OF 2 | E

DRWG NO: A1-9856-2 | REV

MASTER DRWG | REPLACED BY | REPLACES

Electric pump motor and cooling fan motor is provided with still stand heater, which will be switched on automatically when motor is stopped.

There are two-electrical pump motors installed in the crane. In front of starter cabinet is fitted. Selector switch for selection of pump motor 1, 1 and 2 or 2 running.

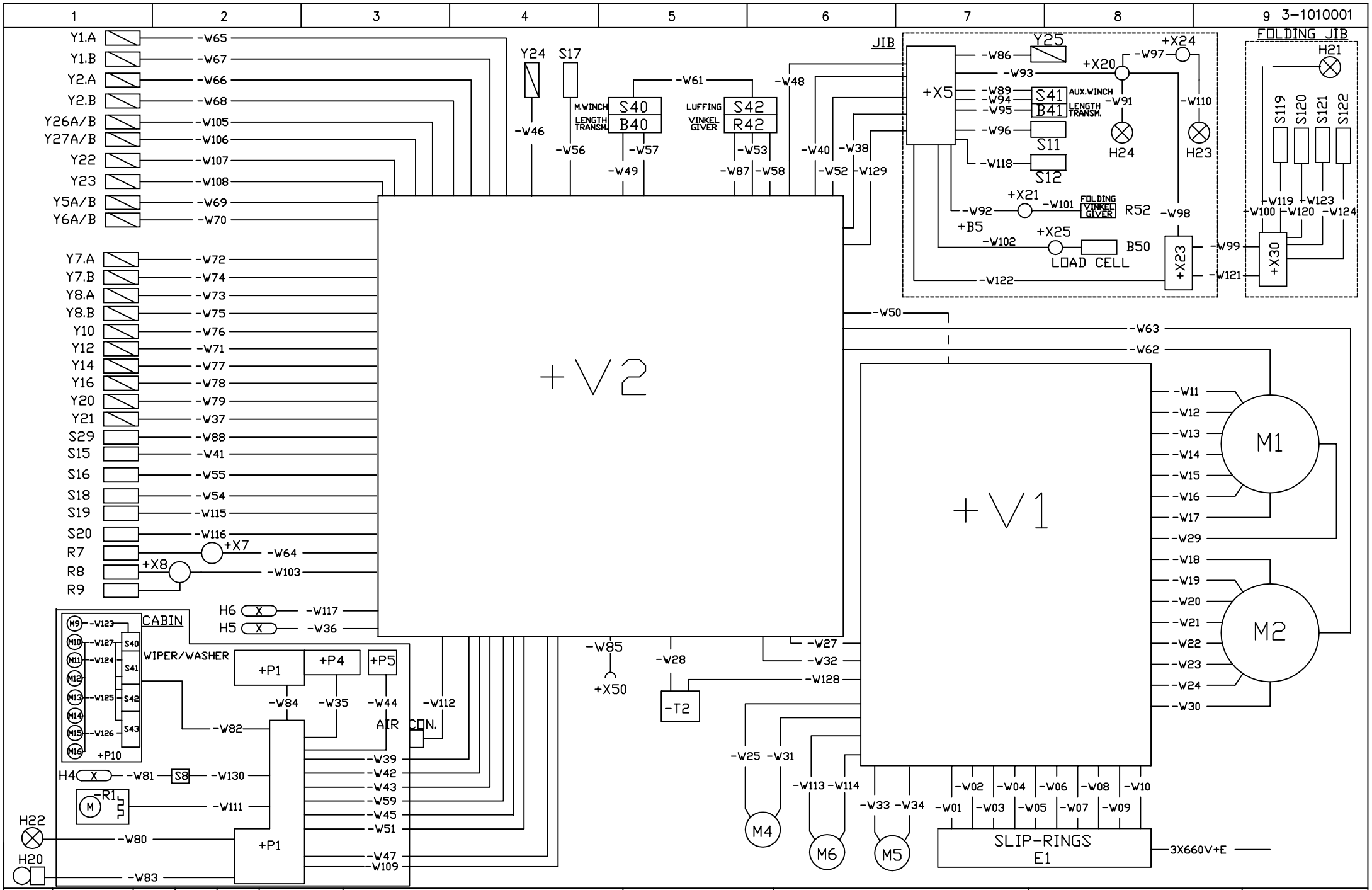
3-1010001
Y1.A
Y1.B
Y2.A
Y2.B
Y26A/B
Y27A/B
Y22
Y23
Y5A/B
Y6A/B
Y7.A
Y7.B
Y8.A
Y8.B
Y10
Y12
Y14
Y16
Y20
Y21
S29
S15
S16
S18
S19
S20
R7
R8
R9
+V2
+V1
JIB
+X5
Y25
+X24
+X20
-W97
S41
AUX.WINCH
B41
LENGTH TRANSM.
S11
S12
H24
H23
+X21
FOLDING VINKEL GIVER
R52
+B5
+X25
B50
LOAD CELL
+X23
FOLDING JIB
H21
S119
S120
S121
S122
+X30
Y24
S17
M.WINCH
S40
B40
LUFFING
S42
R42
VINKEL GIVER
+X7
+X8
H6
H5
CABIN
WIPER/WASHER
S40
S41
S42
S43
+P10
+P1
+P4
+P5
AIR CON.
H4
S8
-R1
H22
H20
-W85
+X50
-W28
-T2
M1
M2
M4
M6
M5
SLIP-RINGS
E1
3X660V+E
Date 30.01.01
Drawn by: JSB
Approved
Norm
Rev.
Alteration
Date
Sign.
Master drwg.
Replaces
Replased by
MJELLEM & KARLSEN VERFT A/S
M/V "SEIS RANGER"
TTS - Norlift AS
MARINE CARGO GEAR
ELECTRO HYDRAULIC OFFSHORE CRANE
GPCFO 2000-5020
CRANE NO.2078
BLOCK DIAGRAM
Project no.
2078
=
+V1
Scale
%
Drwg no.
A3-10100
Sheet 01
N.sh. 02

CABLE LIST

Cable no.	Type		From/To	Cable no.	Type		From/To	Cable no.	Type		From/To
-W01	RP	1x70	E1 - V1	-W37	ØLFLEX	3x1+E	V2 - Y21	-W73	ØLFLEX	3x1,5+E	V2 - Y8A
-W02	RP	1x70	E1 - V1	-W38	PURFLEX	12G1,5	V2 - X5	-W74	ØLFLEX	3x1,5+E	V2 - Y7B
-W03	RP	1x70	E1 - V1	-W39	RP	12x1,5	V2 - P1	-W75	ØLFLEX	3x1,5+E	V2 - Y8B
-W04	RP	1x70	E1 - V1	-W40	PURFLEX	12G1,5	V2 - X5	-W76	ØLFLEX	3x1,5+E	V2 - Y10
-W05	RP	1x70	E1 - V1	-W41	ØLFLEX	3x1,5+E	V2 - S15	-W77	ØLFLEX	3x1,5+E	V2 - Y14
-W06	RP	1x70	E1 - V1	-W42	RP	12x1,5	V2 - P1	-W78	ØLFLEX	3x1,5+E	V2 - Y16
-W07	RP	1x70	E1 - V1	-W43	RP	12x1,5	V2 - P1	-W79	ØLFLEX	3x1,5+E	V2 - Y20
-W08	RP	1x70	E1 - V1	-W44	RP	3x1,5	+P1-+P5	-W80	RP	2x1,5+E	P1 - H22
-W09	RP	1x70	E1 - V1	-W45	RP	12x1,5	V2 - P1	-W81	RP	2x1,5+E	S8 - H4
-W10	RP	1x70	E1 - V1	-W46	ØLFLEX	3x1,5+E	V2 - Y24	-W82	RP	2x1,5+E	P1 - P10 (WIPER PANEL)
-W11	RP	1x35	V1 - M1	-W47	RP	12G1,5	V2 - P1	-W83	RP	2x1,5+E	P1 - H20
-W12	RP	1x35	V1 - M1	-W48	ØLFLEX	3x1,5+E	V2 - +X5	-W84	RK	1X0,75	P1.left - P1
-W13	RP	1x35	V1 - M1	-W49	RC□P	4x2x0,5	V2 - B40	-W85	RP	2x1,5+E	+V2-X50
-W14	RP	1x35	V1 - M1	-W50	RP	3X1,5+E	V2 - V1	-W86	ØLFLEX	3x1,5+E	X5 - Y25
-W15	RP	1x35	V1 - M1	-W51	RC□P	4x2x0,5	V2 - P1	-W87	RP	3x1,5+E	+V2-R43(S42)
-W16	RP	1x35	V1 - M1	-W52	PURFLEX	12G1,5	V2 - X5	-W88	ØLFLEX	3x1,5+E	V2 - S29
-W17	RP	1x35	V1 - M1	-W53	RP	3x1,5+E	V2 - R42	-W89	RP	2x1,5+E	X5 - R41
-W18	RP	1x35	V1 - M2	-W54	ØLFLEX	3x1,5+E	V2 - S18	-W90			
-W19	RP	1x35	V1 - M2	-W55	ØLFLEX	3x1,5+E	V2 - S16	-W91	NMHV□	2x1,5+E	+X20 - H24
-W20	RP	1x35	V1 - M2	-W56	ØLFLEX	3x1,5+E	V2 - S17	-W92	RP	3x1,5+E	X5 - +X21
-W21	RP	1x35	V1 - M2	-W57	RP	7x1,5	V2 - S40	-W93	RP	4x1,5+E	X5 - X20
-W22	RP	1x35	V1 - M2	-W58	RP	7x1,5	V2 - S42	-W94	RP	7x1,5+E	+X5 - S41
-W23	RP	1x35	V1 - M2	-W59	RP	2x1,5+E	V2 - P1	-W95	RC□P	4pairx0.5	V2 - B41
-W24	RP	1x35	V1 - M2	-W60				-W96	RP	2x1,5+E	+X5 - S11
-W25	RP	3x1,5+E	V1 - M4	-W61	RP	2x1,5+E	(R40)S40 - S42(R43)	-W97	RP	2x1,5+E	+X20 - +X24
-W26	RP	2x1,5+E	V2 - P1	-W62	RP	2x1,5+E	V2 - M1(F3)	-W98	RP	2x1,5+E	+X20 - X23
-W27	RP	7x1,5+E	V1 - V2	-W63	RP	2x1,5+E	V2 - M2(F4)	-W99	RP	2x1,5+E	+X23 - X30
-W28	RP	3x2,5+E	V2 - T2	-W64	RP	2x1,5+E	V2 - X7	-W100	NMHV□	2x1,5+E	+X30 - H21
-W29	RP	2x1,5+E	V1 - M1(R2)	-W65	ØLFLEX	3x1,5+E	V2 - Y1.A	-W101	RP	3x1,5+E	+X21 - R52
-W30	RP	2x1,5+E	V1 - M2(R3)	-W66	ØLFLEX	3x1,5+E	V2 - Y2.A	-W102	RC□P	4x2x0,5	+B5 - B50
-W31	RP	2x1,5+E	V1 - M4(R4)	-W67	ØLFLEX	3x1,5+E	V2 - Y1.B	-W103	RP	4x1,5	+V2- +X8
-W32	RP	2x1,5+E	V1 - V2	-W68	ØLFLEX	3x1,5+E	V2 - Y2.B	-W104			
-W33	RP	3x1,5+E	V1 - M5	-W69	ØLFLEX	3x1,5+E	V2 - Y5A/B	-W105	ØLFLEX	3x1,5+E	+V2 - Y26A/B
-W34	RP	2x1,5+E	V1 - M5(R5)	-W70	ØLFLEX	3x1,5+E	V2 - Y6A/B	-W106	ØLFLEX	3x1,5+E	+V2 - Y27A/B
-W35	RP	2x1,5+E	P1 - P4	-W71	ØLFLEX	3x1,5+E	V2 - Y12	-W107	ØLFLEX	3x1,5+E	+V2 - Y22
-W36	RP	2x1,5+E	V2 - H5	-W72	ØLFLEX	3x1,5+E	V2 - Y7A	-W108	ØLFLEX	3x1,5+E	+V2 - Y23

				Date	30.01.01	MJELLEM & KARLSEN VERFT A/S M/V "SEIS RANGER"	TTS - Norlift AS MARINE CARGO GEAR	ELECTRO HYDRAULIC OFFSHORE CRANE GPCFO 2000-5020 CRANE NO.2078 CABLE LIST	Project no. 2078	=	
				Drawn by:	JSB					+V1	
				Approved					Scale %	Drwg no. A3-10100	Sheet 02
Rev.	Alteration	Date	Sign.	Norm		Master drwg.	Replaces	Replased by			N.sh. 03

CABLE LIST

Cable no.	Type		From/To	Cable no.	Type	From/To	Cable no.	Type	From/To
-W109	RP	2x1,5+E	+V2 - +P1						
-W110	NMHVØ	2x1,5+E	+X30 - H23						
-W111	RP	2x1,5+E	+P1 - R1						
-W112	RP	2x1,5+E	+V2 - AIR COND.						
-W113	RP	3x1,5+E	+V1 - M6						
-W114	RP	2x1,5+E	+V1 - M6(R6)						
-W115	ØLFLEX	3x1,5+E	+V2 - S19						
-W116	ØLFLEX	3x1,5+E	+V2 - S20						
-W117	RP	2x1,5+E	+V2 - H6						
-W118	RP	2x1,5+E	+X5 - S12						
-W119	NMHVØ	2x1,5+E	+X30 - S119						
-W120	NMHVØ	2x1,5+E	+X30 - S120						
-W121	PURFLEX	12G1,5	+X30 - +X23						
-W122	RP	3x1,5+E	+X5 - +X23						
-W123	NMHVØ	2x1,5+E	+X30 - S121						
-W124	NMHVØ	2x1,5+E	+X30 - S122						
-W125									
-W126									
-W127									
-W128	RP	3x6+E	+V1 - T2						
-W129	PURFLEX	12G1,5	+V2 - +X5						
-W130	RP	2x1,5+E	+P1 - S8						

				Date	30.01.01	MJELLEM & KARLSEN A/S M/V "SEIS RANGER"	TTS - Norlift AS MARINE CARGO GEAR	ELECTRO HYDRAULIC OFFSHORE CRANE GPCFO 2000-5020 CRANE NO.2078 CABLE LIST	Project no. 2078	=
				Drawn by:	JSB					+V1
				Approved					Scale %	Drwg no. A3-10100 / Sheet 03
Rev.	Alteration	Date	Sign.	Norm		Master drwg. / Replaces	Replased by			N.sh. —

INTERVALS	CHECK	ACTION
100 HOURS	OIL FILTER INDICATORS	CHANGE FILTER IF IN RED SECTION
OR	OIL TANK LEVEL	FILL UP IF NEEDED
MAX 2 MONTHS	FUNCTIONS LIMIT SWITCHES	
	LUBRICATE AS PER INSTRUCTION	
½ YEAR	WIRE ROPE WEARING	
	WIRE ROPE CLAMPS ON WINCH	TIGHTEN
	WIRE ROPE SHEAVES	
	OIL LEAKS INSIDE/OUTSIDE	
	SLIPRING UNIT - BRUCHES	
	ELECTRIC CABLES / PLUG-SOCKETS	
	MOTOR STARTER / LAMPS	
	OIL COOLER	CLEAN RADIATOR
YEAR	CYLINDER HINGE WEAR	
	JIB HINGE WEAR	
	SLEWING RING WEAR	
	SLEWING GEAR PINION WEAR	ADJUST IF NEEDED
	RENEW OR TOP UP HYDR. OIL	
	HYDR. OIL SAMPLE	ANALYSE

REV	ALTERATION	SIGN / DATE
1	RELEASED FOR INSTRUCTION MANUAL	LIS / 30.04.01

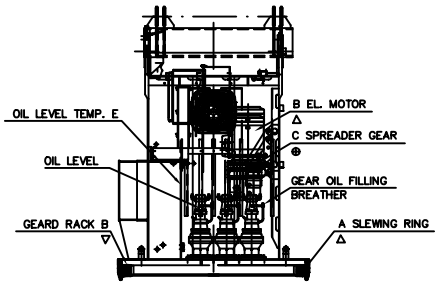

IN MACHINEROOM
- Oil filter/Oil filling C ○
- Oil level temp. E
- El. motor B △
- Slewing ring A △
- 3 x Slewing gear box D,E. ●
- Hinge pin A △
- Spreader gearbox C ⊕

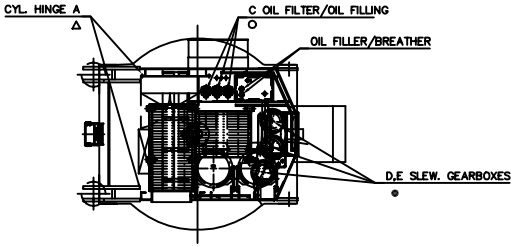

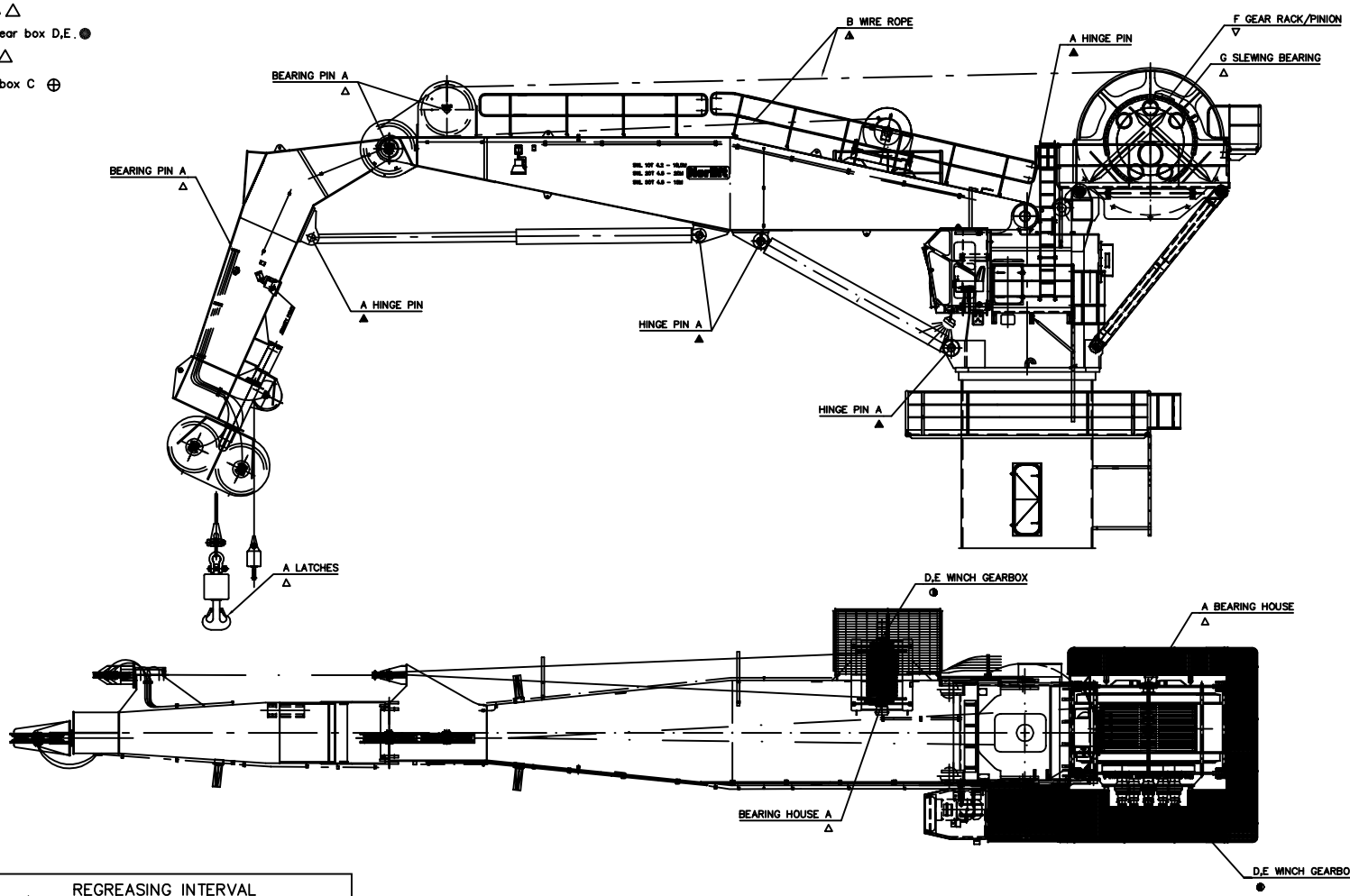

LUBRICANTS

- ● GEAR OIL , MINERAL
- ◐ GEAR OIL, MINERAL
- ◒ GEAR OIL, MINERAL
- ◐ GEAR OIL, SYNTETIC
- ⊕ GEAR OIL, SYNTETIC
- ○ HYDRAULIC OIL
- ▲ EP GREASE, NO MoS2
- ▼ EP GREASE
- △ EP GREASE
- ◭ GREASE/LUB FOR WIRE ROPE
- ▽ GREASE FOR OPEN GEARS

FOR EXACT OIL AND LUBRICANTS SPECIFICATION.
REF. SELECTION CHART DOC. 503

LUB. MAINTENANCE INTERVALS

A: GREASE EVERY MONTH

B: GREASE EVERY 2. MONTH

C: TAKE SAMPLE AND ANALIZE OIL EVERY 6. MONTH. CHANGE OIL WHEN NECESSARY. CHANGE FILTER WHEN INDICATOR IS RED OR AT LEAST ONCE A YEAR.

D: CHANGE OIL AFTER 200HRS. SERVICE. AFTER THAT CHANGE ONCE A YEAR.

E: CHECK OIL LEVEL EVERY WEEK

F: ACC. TO DIAGRAM (REGREASING INTERVAL)

G: ACC. TO DIAGRAM (REGREASING INTERVAL)

(FOR GENERAL MAINTENANCE, REF. DOC. 501)

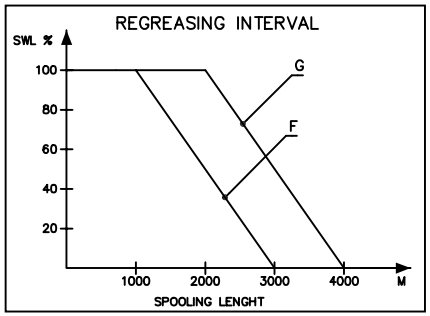

THIS DRAWING IS THE PROPERTY OF TTS-NORLIFT % AND MUST NOT BE REPRODUCED WITHOUT OUR WRITTEN CONSENT

DRAWN BY LIS 30.04.2001	CHECKED BY	APPR BY
PROJECT: GPCFO 2000 M/V "SEIS RANGER"	TTS - Norlift AS MARINE CARGO GEAR	
DRWG NAME: LUBRICATION POINTS AND INTERVALS	SCALE 1:100	E
	DRWG NO A3-10305 REV 1	
MASTER DRWG	REPLACED BY	REPLACES

Rev. : Updated

Distrib. : P-09, Manual

Oil Lubrication

CODE AND USE OF OIL/LUBR.	GENERAL SPECIFICATION	EXAMPLE					
		SHELL	**ESSO**	**TEXACO**	**MOBIL**	**KLÜBER**	**MOLYKOTE**
1) ● SLEWING GEARBOX	DIN 51517-CLP 150 OR 220 ISO-VG 150/220 (MINERAL OIL)	SPIRAX AX 80 OR OMALA OIL 150	SPARTAN 150	MEROPA LUB. 150	MOBILGEAR 630 OR 629	KLUBEROIL GEM 1-220	
1) ◑ WINCH GEARBOX Without spraque clutch	DIN 51517-CLP 150 OR 220 ISO-VG 150/220 (MINERAL OIL)	SPIRAX AX 80 OR OMALA OIL 150	SPARTAN 150	MEROPA LUB. 150	MOBILGEAR 630 OR 629	KLUBEROIL GEM 1-220	
1) 2) ◒ WINCH GEARBOX With spraque clutch	DIN 51519 ISO-VG 32 (MINERAL OIL)	TEGULA 32	TORQUE FLUID N 45	TEXTRAN V 32	MOBIL DTE 24		
1) ◐ WINCH GEARBOX Continuous Operation Seabed winches	PGLP DIN 51502-220 (SYNTHETIC OIL)	SHELL TIVELA OIL WB	SPARTAN SYNTETIC S220	ALPASYN T 220	MOBIL GLYGOYLE 30	KLUBERSYNTH GH 6-220	
1) ⊕ SPREADER GEAR FOR PUMPS	PGLP DIN 51502-220 (SYNTHETIC OIL)	SHELL TIVELA OIL WB	GEAR OIL S220	ALPASYN T 220	MOBIL GLYGOYLE 30	KLUBERSYNTH GH 6-220	
○ HYDR. OIL ON SYSTEM	ISO-VG46 HV 46cST/40º VI˜150 POUR POINT -40º	TELLUS OIL T 46	NUTO H 46 OR UNIVIS N 46	RANDO HDZ 46	DTE 15 M		

1) Mineral and Synthetic oil are not to be mixed. See General Specification.
2) Oil used for gearbox with spraque clutch must not contain MoS2 or other low friction additives.
Oil must stand the FZG test A/8 3.90 DIN 51314, failure load stage, equal or better than 12.

Grease Lubrication

CODE AND USE OF OIL/LUBR.	GENERAL SPECIFICATION	EXAMPLE					
		SHELL	**ESSO**	**TEXACO**	**MOBIL**	**KLÜBER**	**MOLYKOTE**
▲ PLAIN BEARING BRONZE	GREASE WITH MOLYBDENDI-SULPHIDE, MoS2	RETINAX HDX			MOBIL-GREASE SPESIAL		
3) ▼ PLAIN BEARING COMPOSITE	GREASE WITH EP ADDITIVES	ALVANIA EP 2 OR 3 GREASE	BEACON EP 2 N	MULTIFAK EP 2	MOBILLUX EP2	CENTOPLEX 2 EP	
△ ROLLER /BALL BEARING	GREASE WITH EP ADDITIVES	ALVANIA EP 2 OR 3 GREASE	BEACON EP 2 N	MULTIFAK EP 2	MOBILLUX EP2	CENTOPLEX 2 EP	
◭ WIRE ROPE	SALT WATER RESISTANT GREASE WITH CORROSION PROTECTIVE INHIBITORS	ENSIS FLUID G	SURRET N5K	FLOAT COAT	MOBILARMA 778		
▽ OPEN GEAR	GREASE WITH GOOD ADHESIVE PROPERTIES			TEXCLAD PREMIUM 2		GRAFLOSCON A-G1 ULTRA	165 LT

3) Grease used for Composite plain bearings must not contain Molybdendisulphid, MoS2

GENERAL: The products selected should be solvent refined, containing additives against oxidation, corrosion and foaming Also anti-wear and/or EP additives should be included. For use of equipment in extreme hot or cold climate, please contact TTS-Norlift for advise.

Distrib. : P-09, Manual 504

CRANE TYPE: GPC AND CCL

CRANE SIZE	HYDRAULIC OIL LITRE *	SLEW. GEAR OIL LITRE, PR. GEAR	NUMBERS OF SLEW. GEARS	TYPE OF SLEW. GEAR	ACTUAL CRANE(S)	REMARK
250						
320						
400						
500						
630						
800						
900						
1000						
1250						
1600						
2000						
2500						

CRANE TYPE CCS:

CRANE SIZE	HYDRAULIC OIL LITRE *	SLEW. GEAR OIL LITRE, PR. GEAR	NUMBERS OF SLEW. GEARS	TYPE OF SLEW. GEAR	ACTUAL CRANE(S)	REMARK
630						
950						
1250						
1600						

CRANE TYPE: GPT AND GPF

CRANE SIZE	HYDRAULIC OIL LITRE *	SLEW. GEAR OIL LITRE, PR. GEAR	NUMBERS OF SLEW. GEARS	TYPE OF SLEW. GEAR	ACTUAL CRANE(S)	REMARK
40						
63						
100						
160						
250						
320						
400						
500						
630						
800						
1250						
1600						
2000	**1700**	**9,7**	**3**	**3,24**	**2078**	**GPCFO**

*** When filling oil tank first time, fill the tank up to max. Level. After running the crane for a few minutes, additional topping of the oil tank will be necessary, as some of the hydraulic oil will remain in the system.**

WINCH GEAR:

MAIN WINCH GEAR	NO(S): 4	TYPE OF GEAR: **3,24**	LITRE PR. GEAR: **6,5**

AUX. WINCH GEAR	NO(S): **1**	TYPE OF GEAR: **4,27**	LITRE PR. GEAR: **10,0**

Oil type and specification: Ref. ``Oil & Lubricants selection chart`` K-07-16.e

EVERY YEAR:

1) Inspect slewing ring bolts and nuts.

2) Check bolts by use of torque wrench (less than M24) or bolt tensioner.

EVERY 4 YEAR:

Retighten according to table below.

BOLTS GRADE 10,9	ACTUAL BOLTS ON THIS CRANE	TORQUE Nm	PRE-TENSIONING KN
M16		280	-
M20		560	-
M24		-	260
M27		-	340
M30		-	415
M33		-	520
M36	**2078**	**-**	**610**
M39		-	730
M42		-	840

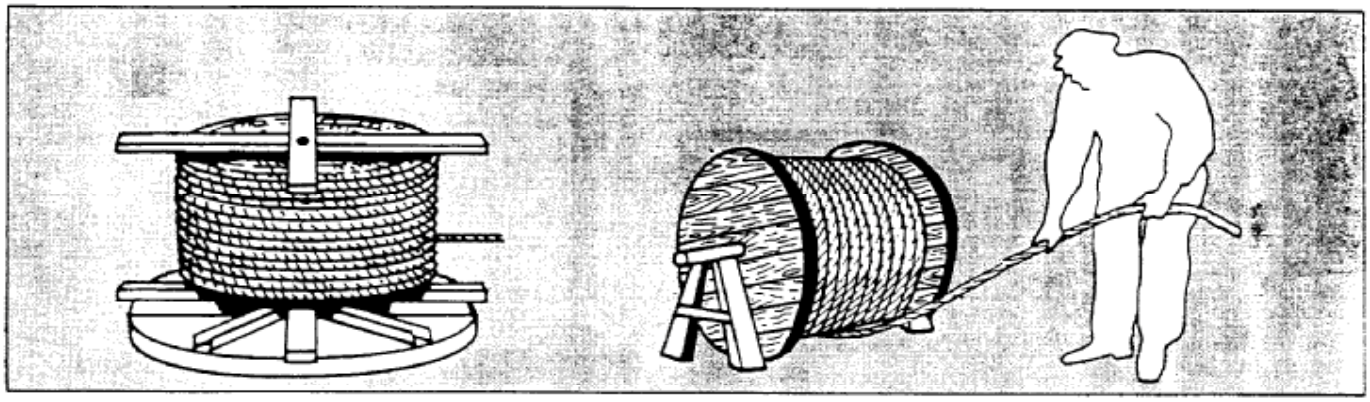

AVSPOLING OG UTLEGGING AV KVEIL
Ståltau leveres i ferdig oppkuttede lengder, enten i kveiler eller på tromler. Det må vises stor forsiktighet når ståltauet skal fjernes fra forsendelsesemballasjen. Siden det kan oppstå permanente skader på tauet ved gal avspoling eller utlegging. Uttrekking av tau over trommelflens eller fra en kveil som ligger på gulvet, vil forårsake løkker på tauet. Tilstramming av en løkke vil gi en ubalanse i tauoppbyggingen og kan resultere i en åpen eller lukket kink.
En lett ståltaukveil kan rulles ut langs et rent gulv, men det må alltid gjøres under kontroll.
En trommel kan plasseres på et kveilebord, eller monteres på lagerbukker med en aksel trædd gjennom hullet i senter av trommel. Trommelen kan således rotere
fritt. Sørg for at tauet er stramt og holdes rett under avspoling. Unngå å trekke et ståltau gjennom sand, grus og skitt fordi tauet vil ta til seg slitasjepartikler som vil binde seg til den fettete tauoverflaten.

UNREELING AND UNCOILING
Wire rope is shipped in cut lengths, either in coils or on reels. Great care should be taken when the ropes is unpacked as it can be permanently damaged by improper unreeling or uncoiling. Looping the rope over the head of the reel or pulling the rope off a coil while it is lying on the ground will create loops in the line. Pulling on a loop will, at the very least, produce unbalance in the rope and may result in open or closed kinks.

A light coil may be unrolled on a clean floor, but should always be kept under control.
A reel may be placed on a turntable, or mounted on stands and supported by a bar or tube through the hole in its center, the reel can then revolve freely. Make sure

that the rope is kept taught and straight during unreeling. Avoid dragging wire rope through sand, gavel, and dirt it may pick up abrasive that can adhere to it lubricated surface.

INSTALLASJON AV NYE TAU
Sikring eller låsing av tau enden
Enhver fri tauende - uansett om ståltauet er dauslått (forformet) eller ikke - må være sikret, d.v.s. bendslet med ståltråd eller avsmeltet og spisset. Når en tauende settes fast i en kilelås, må man alltid sørge for at hele tautverrsnttet er ordentlig sikret (låst) før montasje av kilelås.
Kontroll av skiver
Når et nytt ståltau skal monteres i et system der det er brukte skiver, er det meget viktig at skivesporet blir kontrollert og at tegn på slitasje og skarpe kanter blir fjernet. Spordiameter for en ny eller re-maskinert skive skal under ingen omstendigheter være mindre enn 5% større en ståltauets nominelle diameter.
Skivene må kunne rotere fritt. Det vil si at de må smøres regelmessig.
Inntrekking av tau
Hvis det nye tauet trekkes gjennom systemet ved å feste det til enden av det brukte tauet, må ikke bare koblingen mellom tauene være sterk nok, men den må også forhindre at rotasjon i det gamle tauet blir overført til det nye. Den beste metoden er å bruke flettede wire-strømper som er koblet sammen med en endeløs fiber-stropp. Den flettede strømpen må festes forsvarlig til tauet med wirebendsel.

INSTALLATION OF NEW ROPES
Securing the rope ends
Every free rope end - regardless whether preformed or not - must be tightly served (or welded) during the entire installation procedure. When attached a rope end in a wedge socket it is of the utmost importance that entire rope cross-section, including steel core if applicable, be securely and immovable anchored.
Inspection of sheaves
When a new rope is to be installed on used sheaves.
It is particularly important that the sheave groove are checked and any wear or sharp edges should be removed. The diameter of the groove should under no circumstances be less than 5% greater than the nominal diameter of the rope.
In order to ensure a minimum turning effort, all sheaves should be kept properly lubricated.
Reeving of rope
If the new rope is reeved by attaching it to the end of the old rope, connection between the ropes during the transfer should not only be strong but should also prevent the twist in the old rope from being transmitted to the new rope. The best method is to use wire rope socks, also called Chinese fingers. connected by a grommet of a fibre rope. The wire rope sock must be securely attached to the rope by a serving.

Kontroll av Skiver **Inspection of Sheaves**

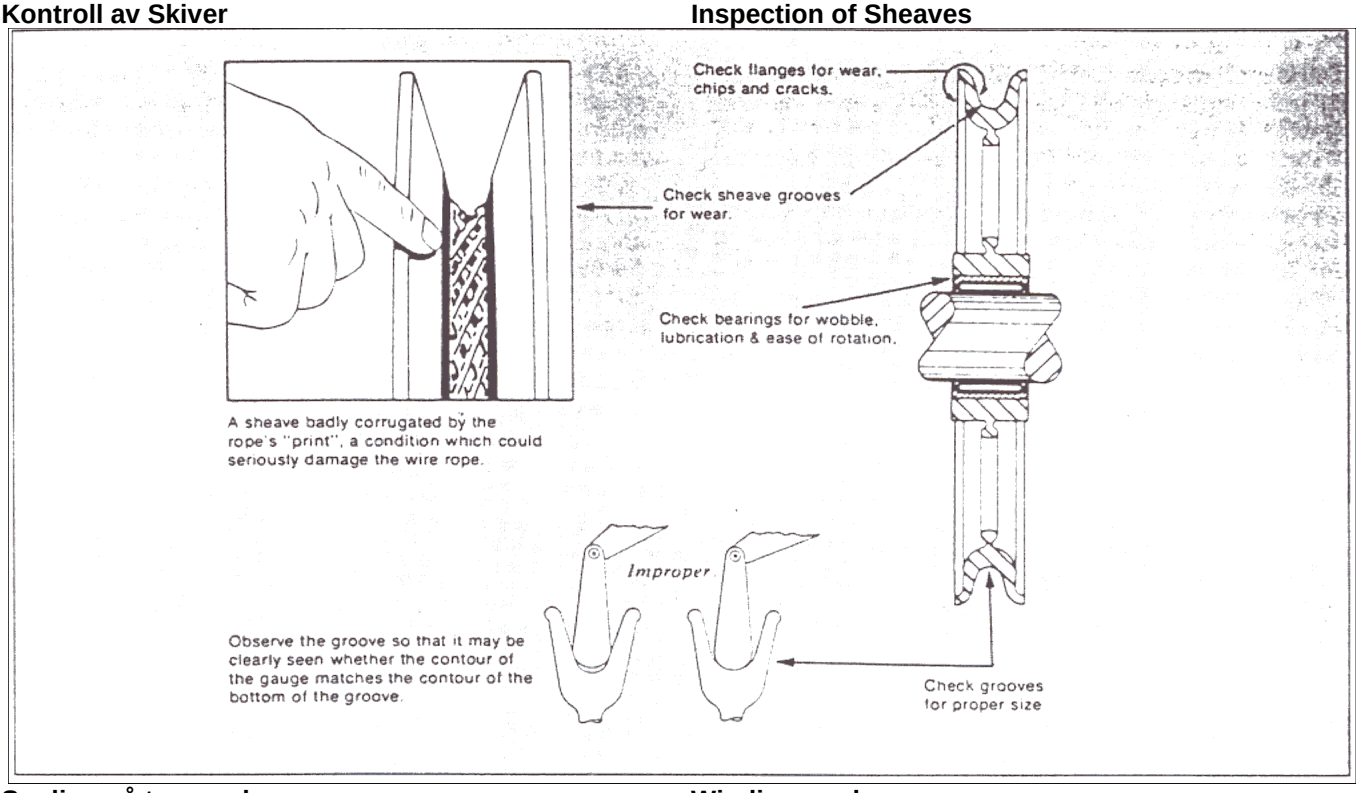

Spoling på trommel

Når tauet skal spoles på en vinsjtrommel eller på en annen trommel, sørg for at tauet bøyes i samme retning. Man unngår dermed S-bøyer som har en tendens til å forstyrre taukonstruksjonen, d.v.s. forandre slaglengden. Avstanden mellom oppviklertrommel (vinsj) og avviklertrommel bør være så stor som mulig slik at innløps-

vinkelen blir liten.

Skissen under hvordan tauet skal spoles. Spol fra oversiden på en trommel til oversiden på en annen, eller fra undersiden på en trommel til undersiden på en annen trommel.

Det er også nødvendig å holde strekk i tauet for å få en god spoling. En enkel brems f. Eks. en planke presset mot trommelflensen vil gi tilfredsstillende taustrekk gjennom hele spolingen for en liten taudimensjon. For større taudiametre og lange taulengder bør det benyttes en skikkelig avbremsningsanordning, som girl det nød-Vendige strekket i tauet for at tett og stram spoling på flere lag skal finne sted. En tommelfingerregel sier at ca. 10% av arbeidslasten er et tilstrekkelig mothold eller bremsekraft.

Når det skal anvendes Langslåtte – eller flerparters parallellslåtte ståltau, må det alltid sørges for at tauet Ikke vrir seg under montasje.

Hvis tauet vrir seg opp, vil trådene i partene i Langslåtte tau eller partene i parallellslåtte tau løsne, og de kommer Ut av sin naturlige posisjon.

Winding on drum

When winding a rope onto a machine drum or onto Another reel, make certain that it bends in the same direction. Reverse bends which tend to make some rope Constructions unstable with disturbance of laylenghts are thus avoided. The distance between take-up (drum) and pay-off (reel) should be kept as great as possible in order

To reduce the feet angle.

Drawing below is showing proper spooling direction on a drum or a reel. Re-spool from top of one reel to the top on another, or from the bottom of one reel to the bottom Of another.

It is also necessary to apply a tensioning load to the rope to achieve good spooling. A simple brake such as a plank, rigged to rub against the reel flanges, will provide ample rope tension throughout the winding for a small rope size. For big rope sizes and long lengths a proper unreeling stand with adjustable brake is required.

This will provide a sufficient rope tension, and all layers will spool tight and true. As a rule of thumb a back tension or braking force of 10% of working load is Sufficient.

When using Lang slay or multiparts parallel-lay ropes (Unitlay-ropes) and loss of twist must be avoided.

When the rope untwists about its own axis, wires in the stands (in Lang slay ropes) or stands in the Unitlay rope (parallel-lay ropes) will become loosened.

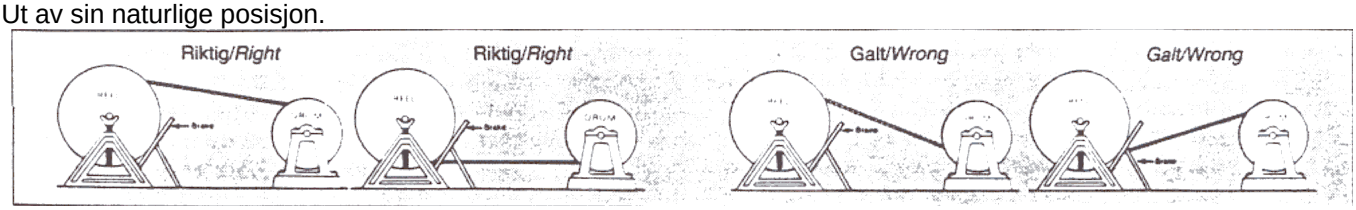

Forankring av Tau-enden
Tau-enden må forankres til trommelen på en forsvarlig måte, og som er i henhold til vinsjleverandørens spesifikasjoner.
Det skal være minst tre omlegg igjen på trommel når alt tauet er spolet av under normal kjøring.
Forankringspunktet plassering på trommel er avhengig av tauets slagretning, som vist på figuren nedenfor.
Når det gjelder nytt og gammelt vinsjutstyr, bør man om det er mulig benytte et forankringspunktet som favoriserer høyreslått tau. Venstreslått tau er sjelden lagervare.Fordelen ved å benytte riktig spoleretning er at tauet legger seg tett på trommel og det oppnås jevn spoling.Hvis det benyttes gal spoleretning, vil tauomleggene ligge spredt bortover langs trommelen.
Åpen og uregelmessig spoling vil forårsake alvorlig tauskader når det er to eller flere lag på trommelen, d.v.s. flatklemming og knusing av tauet.

Drum anchorage point
The end of the rope must be secured to the drum by such means as will give the and attachment at least as much strength as is specified by the equipment manufacturer.
There should be at least three dead turns remaining on the drum when the rope is unwound during normal operation.
Locate the rope anchorage point on the machine drum in relation to the direction of lay of rope, as shown on figures below.
On new equipment and also on existing equipment where possible, the drum anchorage should be positioned so as to favour right lay rope, since left lay rope is seldom available from stock.
The advantage in using rope or proper directional lay is that when the rope is spooled onto the drum the wraps on the drum will hug together and establish an even layer. With rope of improper lay the wraps will spread apart and cause the rope to cross over on the drum.
Open or wavy winding will result in serious damage to multiple windings, i.e. flattening and crushing the rope.

Påspoling på trommel

Coiling of Rope on Drums

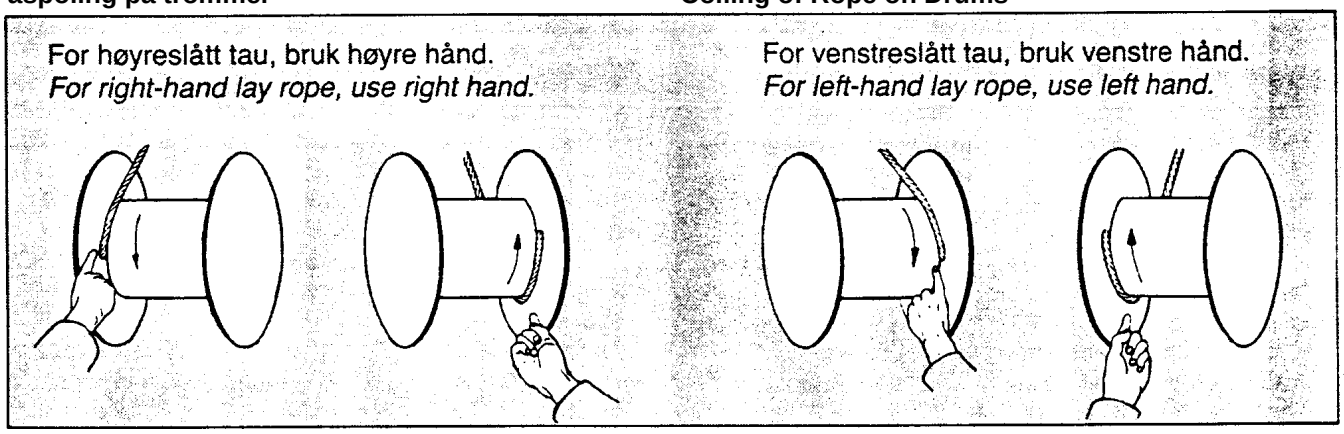

Innkjøring av ståltau
Etter installasjon av nytt tau anbefales at tauet blir kjørt gjennom systemet flere ganger med liten belastning og lav hastighet. Dette medfører at det nye tauet tilpasser seg gradvis til de rådende arbeidsbetingelser. Det vil si at kordelene setter seg. Det forekommer en viss lengde-justering og taudiameteren reduseres litt fordi kordelene og kjernen blir presset sammen. Tauet vil således være mindre utsatt for skader når maksimal last anvendes.
Den tiden som benyttes til innkjøring av tauet vil bli inntjent flere ganger med en økning av levetiden til tauet.

Running in period
After installing a new rope it is always advisable to run it through its operating cycle several times under light load a at reduced speed. This allows the new rope to adjust itself gradually to working conditions and enables the strands to become settled, for some stretch to occur, and
for the diameter to reduce slightly as the strands and core are compacted. The rope is then less liable to be damaged when full load is applied. The time spent on running in a wire rope will be more than regained by the extra service that will be obtained.

Sammenkobling av Ståltau
-Et høyre slått tau skal ikke forbindes med et venstre tau. De vil rotere og slå seg opp.
-Spleis ikke et Langslått tau til et krysslått eller et dauslått til ikke-dauslått tau.

Connecting Splicing of Ropes
-Never connect a right lay rope to a left lay rope. They will cause rotation and unlaying.
-Never splice a Lang lay rope to a ordinary lay rope, nor a preformed to a non-preformed rope.

Bendsling av ståltau
Det finnes to godkjente metoder for bendsling. Metoden vist på figuren er den som anbefalt av ScanRope. Bendslet bør være en bløt ståltråd eller kordel. Diameteren på bendselet og lengden av bendslingen vil være avhengig av ståltaudiameteren. Bendslingslengden skal aldri være mindre enn diameteren på det tauet som skal bendsles.
Forformet eller dauslått tau trenger ikke mer enn ett bendsel på hver side av kuttstedet. For de tauene som ikke er dauslått, anbefales minst to bendslinger på hver side. Avstanden mellom bendslinger skal være 6 tau-diametre.
VIKTIG!
Rotasjonsfattig ståltau skal ha minst 4 bendslinger på hver side av kuttstedet.

Seizing Wire Rope
There are two widely accepted methods of applying seizing. The method shown in the figure is the one recommended by ScanRope. The seizing itself should be a soft, or annealed wire or strand. The seizing wire diameter and the length of the seize will depend on the diameter of the rope. But the length of the seizing should never be less than the diameter of the rope being seized. For preformed ropes, one seizing on each side of the cut is normally sufficient. Ropes that are not preformed, a minimum of two seizing is recommended. Seizing should be spaced 6 rope diameter apart.

NB!
Non-rotating ropes should have at least 4 seizing on each side of the cut.

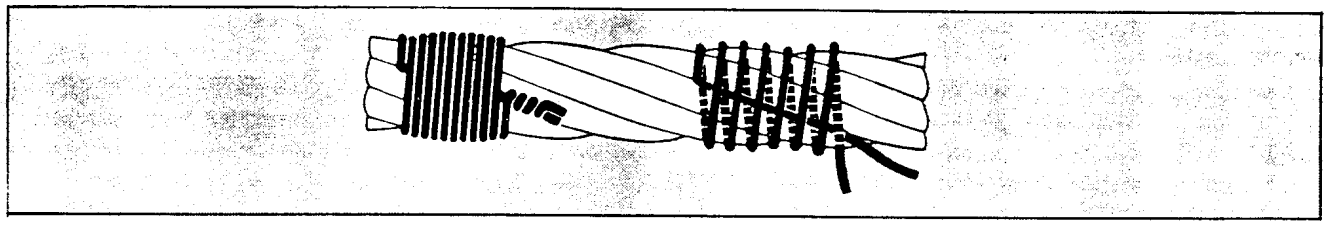

VEDLIKEHOLD
Skikkelig vedlikehold av utstyret over hvilke tauene opererer har en stor betydning for tauets levetid.
Slitte skivespor, dårlig oppretting av skivene og slitte deler resulterer i sjokkbelastninger og overdreven vibrasjon som har en ødeleggende effekt på tauet.
Skiver og ruller med spor skal inspiseres regelmessig, fordi slitasje i sporene kan forårsake klemming og slitasje
av tauene. Hvis sporet har avtrykk av tauet, må sporet dreies på ny eller byttes ut med en skive av hardere materiale. Det samme skal gjøres med tromler som viser den samme effekt. Skiver med for store spor gir ikke skikkelig støtte for tauet og må byttes ut. Skiver og rullelagre skal rotere lett. For stor motstand vil forårsake tauutmatting på grunn av vibrasjon.
Svært tunge skiver må byttes ut da de på grunn av sin store treghetsmasse vil rotere etter at tauet har stoppet. Dette forårsaker stor slitasje på tauet.

MAINTENANCE
Proper maintenance of the equipment over which the ropes operate has an important bearing on rope life.
Worn grooves, poor alignment of sheaves and worn parts resulting in shock loads and excessive vibration will have a deteriorating effect.
Sheaves and grooved rollers should be checked periodically for wear in the grooves which may cause
pinching and abrasion of the ropes. If the groove bears the imprint of the rope, it should be machined clean or replaced with a sheave of harder material.
The same applies to drums showing similar effect.
Sheaves with oversized grooves do not properly support the rope and must be replaced.
Sheave and roller bearing should be checked for free rortation. Sticking will cause unnecessary wear.
Excessive wear in sheave bearings can cause rope fatigue from vibration.
Excessively heavy sheaves should be replaced as they tend to rotate from centrifugal force after the rope stops. This causes wear on the rope.

Lagring
Både galvanisering og blankoljet ståltau bør oppbevares ved jevn temperatur i et tørt rom. Skal tauet lagres i lengre tid, bør det være ekstra godt infetter. Hvis ståltau lagres ute under presenning, må man være oppmerksom
på faren for kondens. Et ståltau som har vært i bruk, må gjøres rent, tørkes og innfettes før det settes bort.
Ståltau som har vært brukt i sjøvann, bør dessuten spyles med ferskvann.

Storage
Both galavanized and bright ropes should be stored at an even temeprature in a dry place. For lengthy storage the rope should be particulary ell lubricated. Attention must be paid to the danger of condensation in the case
of outdoor storage under a tarpaulin.
A rope that has been used must be cleaned, dried and lubricated before being put into storeage. Ropes which have been exposed to sea water should be washed in fresh water.

Ettersmøring

Den smøringen som nye ståltau får under produksjon er holdbar under lagringsperioden og i begynnelsen av tauets levetid.
Tauene må forøvrig ettersmøres regelmessig.
Skikkelig smøring er viktig for tauets levetid, siden smøringen tjener både som beskyttelse mot korrosjon og som faktor som reduserer friksjonen mellom trådene og partene i tauet.
Smøremidlet skal være fri for syre og ikke ha skadelig innvirkning hverken på trådene eller fiberkjernen.
Smøremidlet må ha en konsistens som gjør det mulig for det å trenge godt inn i tauet. Tauet må rengjøres før det ettersmøres.
For å oppnå maksimal inntreging skal smøremidlet legges på tauet der det åpner seg, som for eksempel under kjøring over en skive eller på en trommel.
Hvis det ikke gjennomføres et planlagt program for regelmessig smøring, vil tauet ødelegges hurtig på følgende måte:

-Korrosjon og gropdannelse vil medføre en reduksjon av stålarealet, som gir en reduksjon av tauets bruddstyrke.
-Trådene vil bli sprø av overdreven korrosjon og vil lett brekke under bøyning.
-Siden hver tråd i tauet vil bevege seg relativt til de andre under en påkjenning, er de utsatt for slitasje på grunn av friksjon. Mangel på smøring vil øke slitasjen, og tap av stålareal vil medføre en markert reduksjon av brudd-styrken.
-Groper forårsaker også en intern låsing av trådene som gir en reduksjon av utmattingsmotstand.

Field Lubrication

The lubrication new ropes receive during manufacture is adequate for initial storage and the early stages of the ropes working life. It must however be supplemented at regular intervals. Proper lubrication is important to the service life of the rope. The lubricant serves both as protection against corrosion and as a factor to reduce the friction between wires and strands in the rope.
Lubricant should be free from acid and with no pernicious influence either on the wires or on the core.
The lubricant must have a consistency that enables it to penetrate into the rope. The rope must be clean before the lubricant is applied.
For maximum penetration, the lubricant should be applied to the rope where it «opens up» as it travels around a sheave or winds on a drum. If a planned program of regular lubrication is not carried out, the rope will deteriorate rapidly as follows:

-Corrosion and pitting will occur causing a loss of steel area and, thus a loss in strength of the rope.
-The wires will become embrittled from excessive coorcion and will break easily during bending.
-Since each wire in the rope moves relative to the others during operation, they are subject to frictional wear. Lack of lubrication will increase the wear rate causing a marked reduction in strength from loss of steel area.
-Pits also cause internal nicking of the wires which results in loss of fatigue resistance.

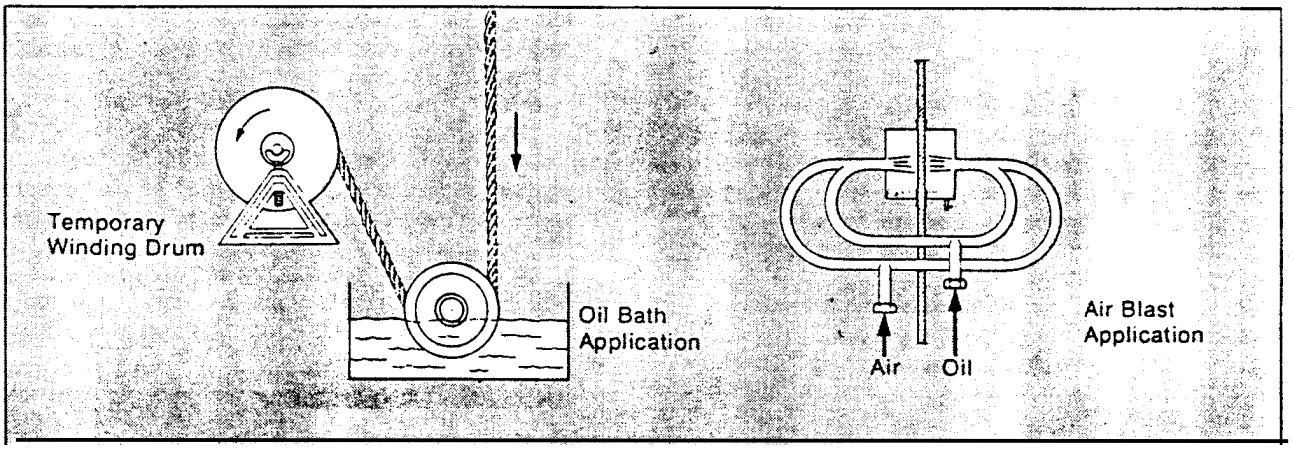

Introduction
General maintenance of the electric equipment of the crane is important in order to prevent unexpected breakdown.

The following general advice may be useful.
Relevant block-diagram and detailed circuit diagrams and placed in section II: Electric Equipment.

Start the crane and try out all combinations of movements that are practical. This will show if the electric functions are working satisfactory.

Inspect all electric equipment, cabinets and components.
Any defective component must be repaired or replaced without delay. A detailed inspection and overhaul at two-years intervals is recommended.
Check that all screws and nuts are securely tightened in the cabinets.
Check also that all switches and push buttons are operating correctly, and that cable connections are perfectly tight and all insulating parts are intact.
Make sure that inspection door gaskets seal perfectly.

Earth connection, hull
Verify that the protective earth connections at the crane is made to the ship's hull.
Clean contact surfaces when required.

Earth connection, crane
Check crane system earth connections, and clean contact surfaces as required.

Control boxes
Clean contacts, insulating parts, cams, contact rolls and rotary potentiometers.
Make sure that all cable connections are clean and secure tightened.
Clean the control levers, and grease their sliding surfaces. Check on the return springs and grease lightly so that no grease transfer to the contacts.

Floodlight (if mounted)
Make sure that connections in the junction box are clean and well tightened.
Remove moisture and dirt.
- When necessary, clean contact surfaces of terminal strips and of lamp holder.
- Make sure that lamp holder gasket seals correctly.

Slip-ring unit (if mounted)

Before opening the slip-ring unit or working with insulated rings, make sure that main switch in engine room is disconnected.

- Verify that slip-ring contact surfaces are smooth and even. Clean as required.
- Check contact pressure on brushes.
- Replace carbon brushes or entire slip-ring assemblies as required.
- Make sure that cable connections are securely tightened.
- Make sure that rocker arm mounting screws are securely tightened.

The limit switches for hoisting and luffing are contained in switch boxes.
Hoisting limit switches is located on each winch and luffing limit switch is connected to the jib bolt.
Every switch function is set separately by means of a rotating cam, which control a micro-switch.

SETTING LIMIT SWITCHES

Back off the lock screw of the switch cam in the limit switch boxes, using a 10 mm articulated wrench, the cams are then easily rotated to their proper settings.

After setting the cams correctly, re-tighten the lock screws and operates all crane movements beginning at reduced speed and finishing at maximum speed to check cam settings.

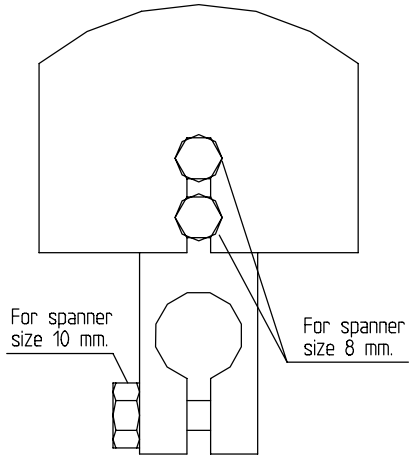

CAM

MEASURE REFERENCES

The following measures are stated in the document TECHNICAL DATA under the section 2, TECHNICAL SPECIFICATION

JIB RADIUS MAX	(m)
JIB RADIUS MIN	(m)
LIFTING HEIGHT	(m)

Other measures are stated in the figs.

Please note that the JIB RADIUS measures refer to the crane house-slewing centre.
(Not to the jib-bearing centre!).

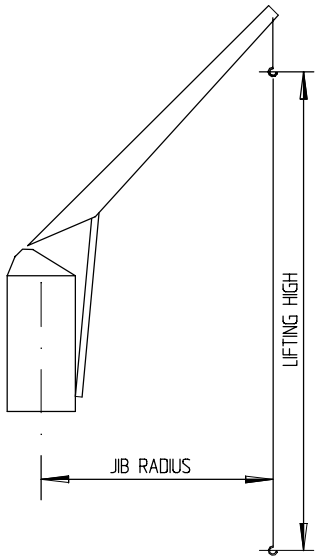

LUFFING JIB LIMIT SWITCH

The included limit switches are shown in the below figs. A more detailed information about the settings is given on the page 3.

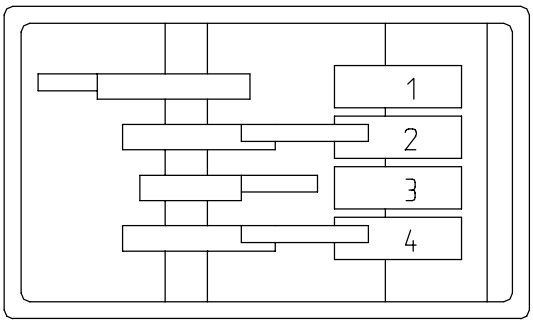

Fig. A

Limit switch box on the luffing.

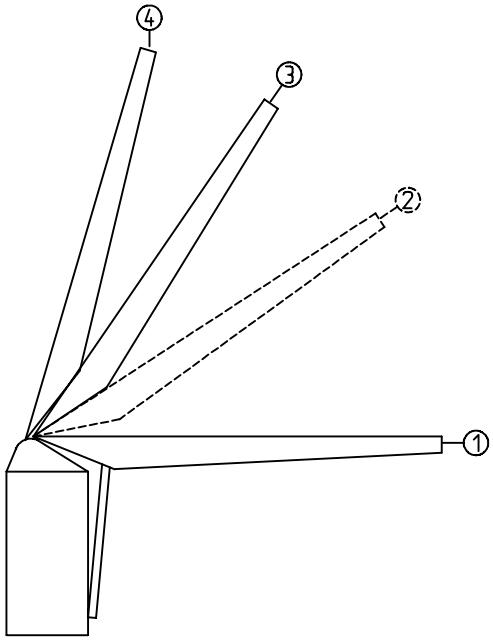

CAM DISC. 1 - STOP OUT
Push-button «By-pass jib» has to be activated during luffing out to be able to park the jib.

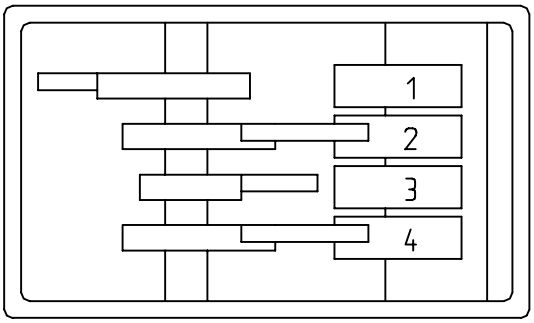

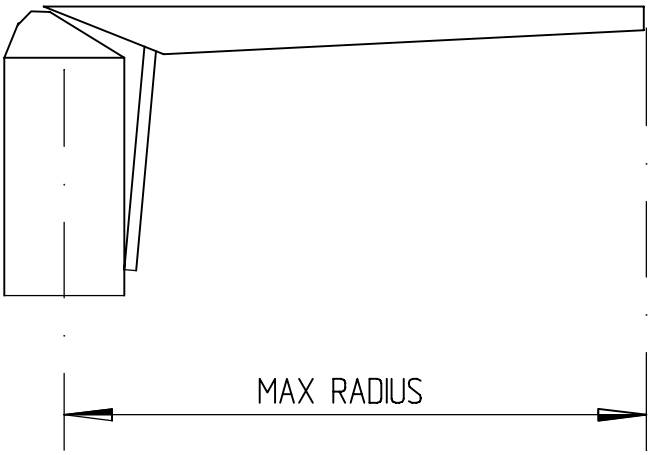

CAM DISC. 2 - SPEED REDUCTION OUT

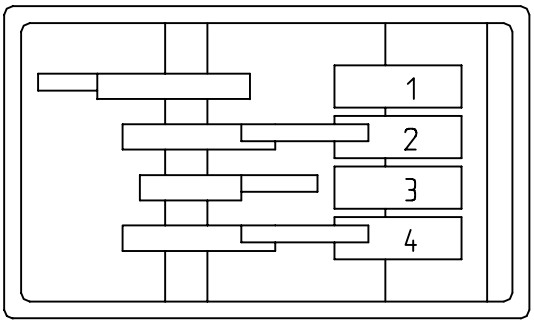

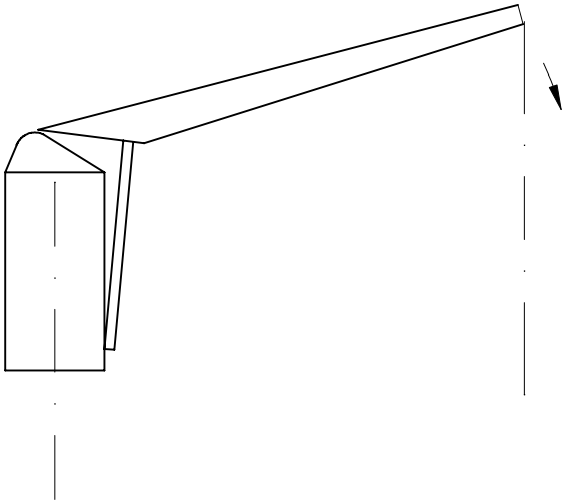

CAM DISC 3 - SPEED REDUCTION IN

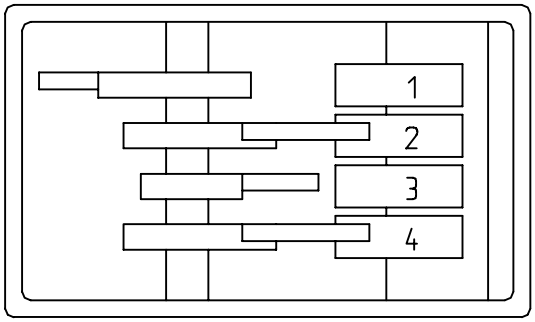

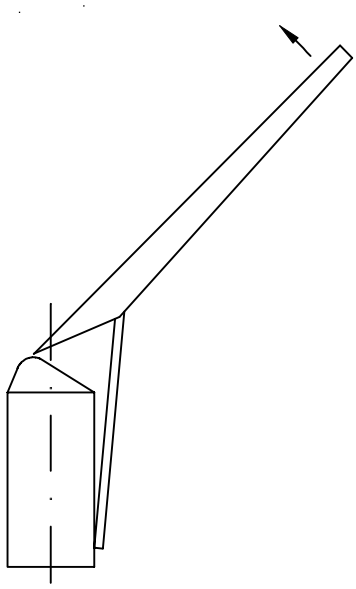

CAM DISC 4 – STOP LUFFING IN

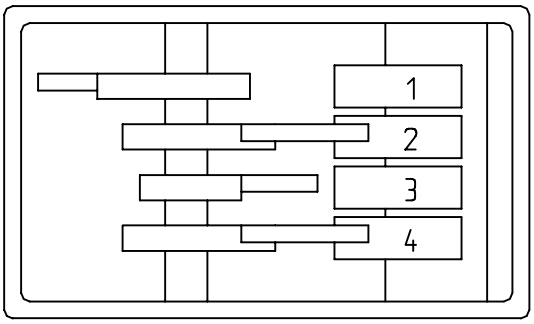

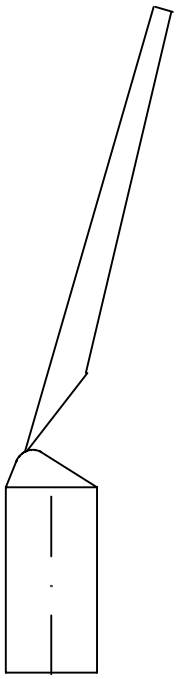

MAIN. WINCH LIMIT SWITCHES

The included limit switches are shown on below.
More detailed information's about the setting is given on page 1.

The limit switch box is located on the winch.

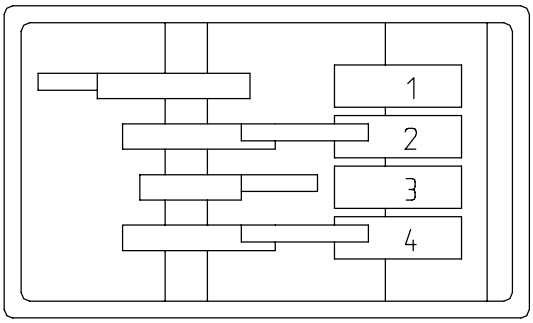

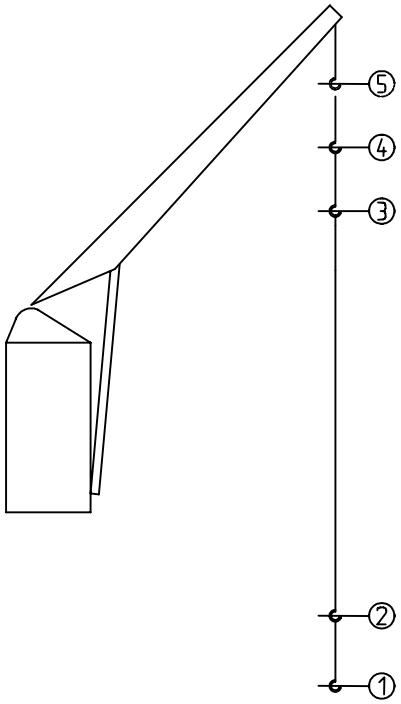

CAM DISC 1 - «EMPTY DRUM», STOP DOWN POSITION
This cam shall be adjusted to operate switch when there are 7-turns on drum.

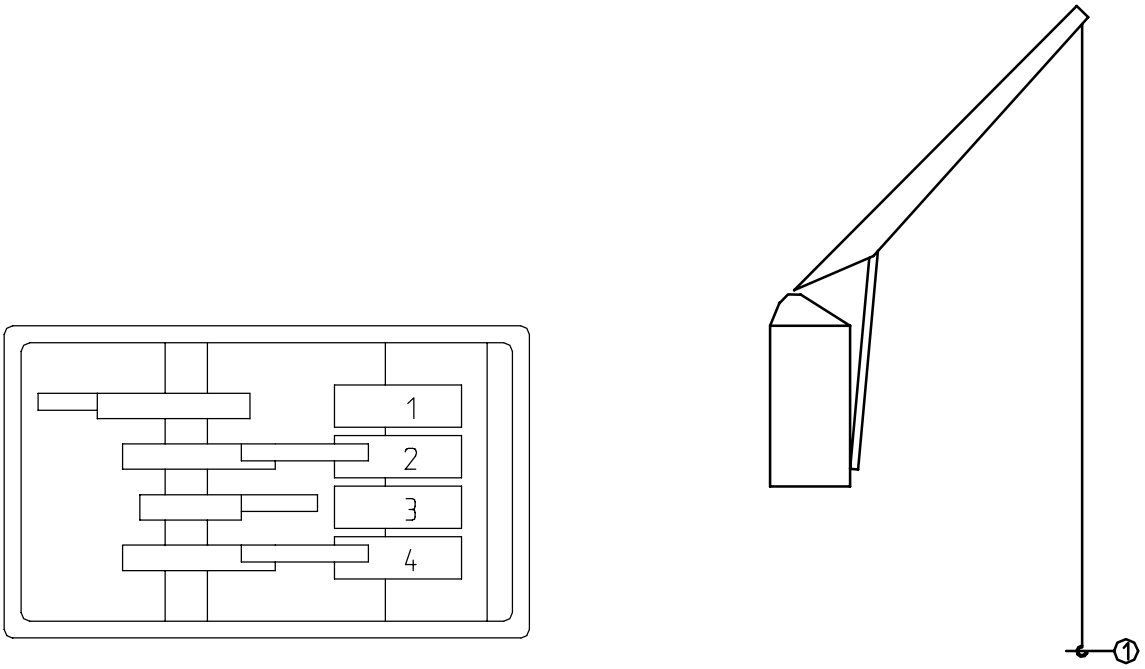

CAM DISC 2 – SPEED REDUCTION, LOWER

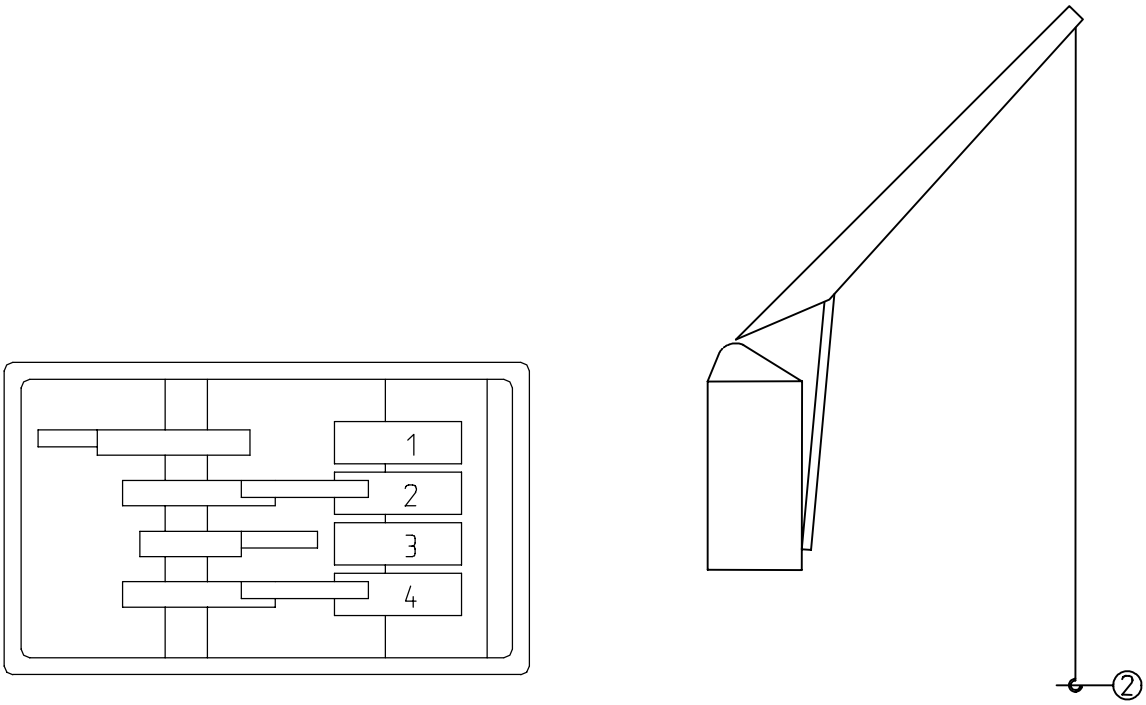

CAM DISC 3 – SPEED REDUCTION, HOISTING

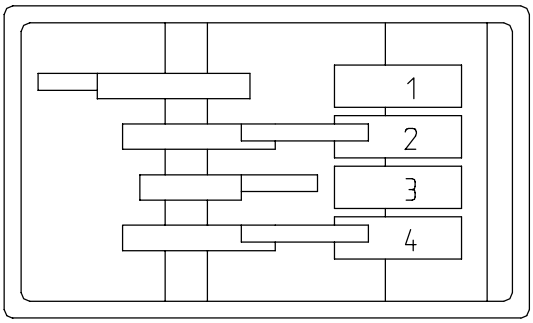

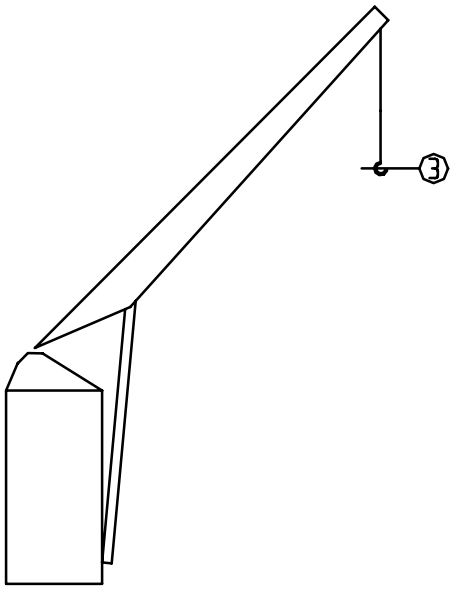

CAM DISC 4 - «FULL DRUM», STOP HOISTING, HORIZONTAL JIB.

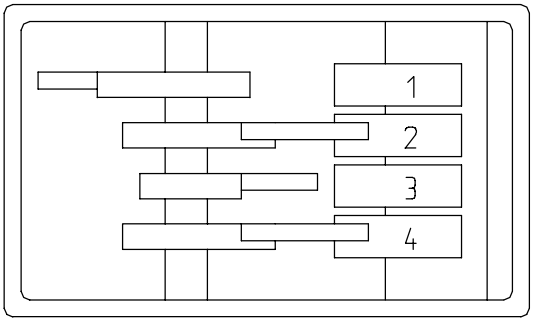

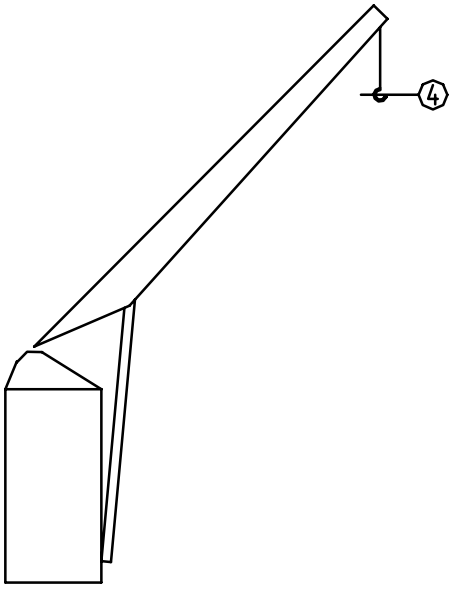

CAM DISC 5 - «FULL DRUM», STOP HOISTING, VERTICAL JIB.

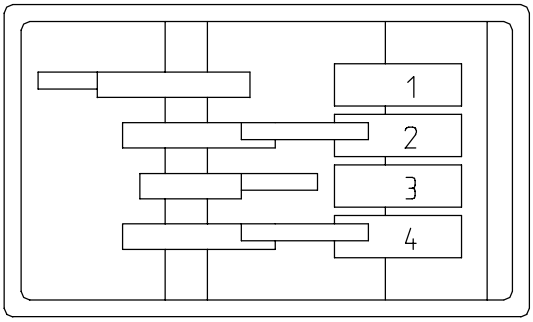

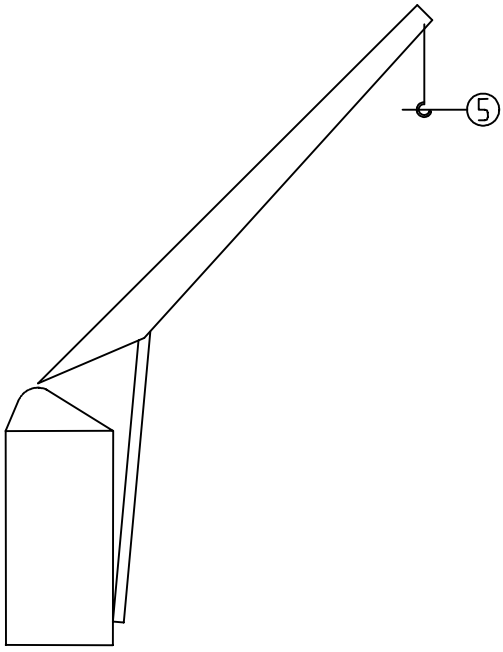

AUXILIARY WINCH LIMIT SWITCHES

The included limit switches are shown on below.
More detailed information's about the setting is given on page 1.

The limit switch box is located on the winch.

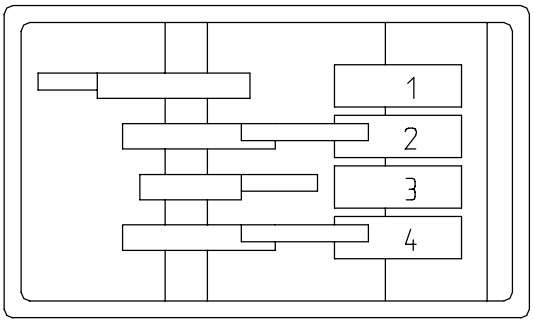

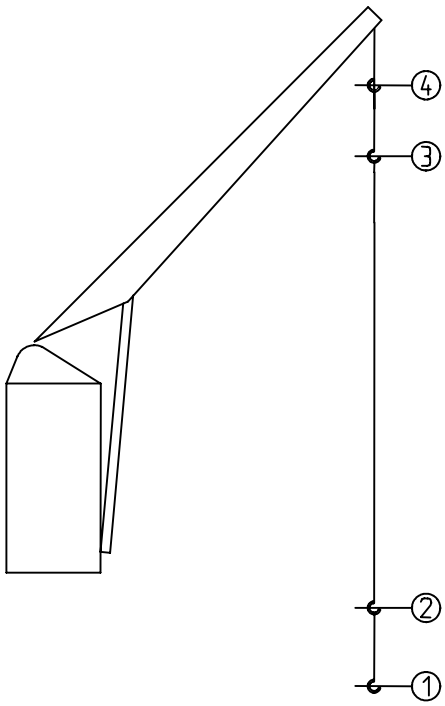

CAM DISC 1 - «EMPTY DRUM», STOP DOWN POSITION

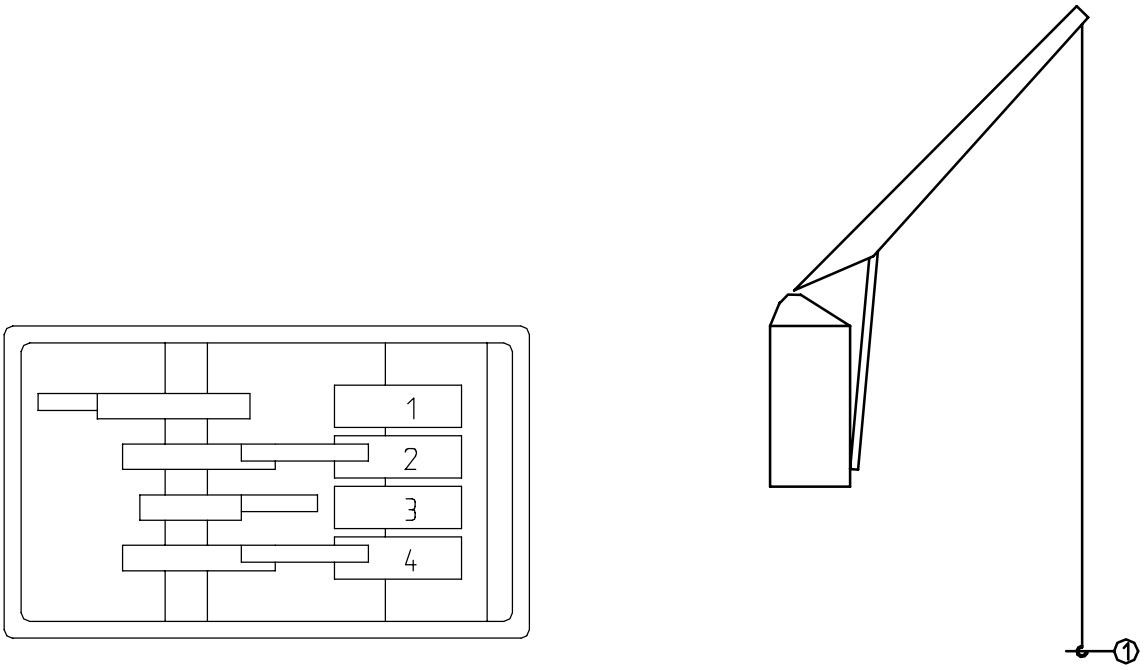

CAM DISC 2 – SPEED REDUCTION, LOWER

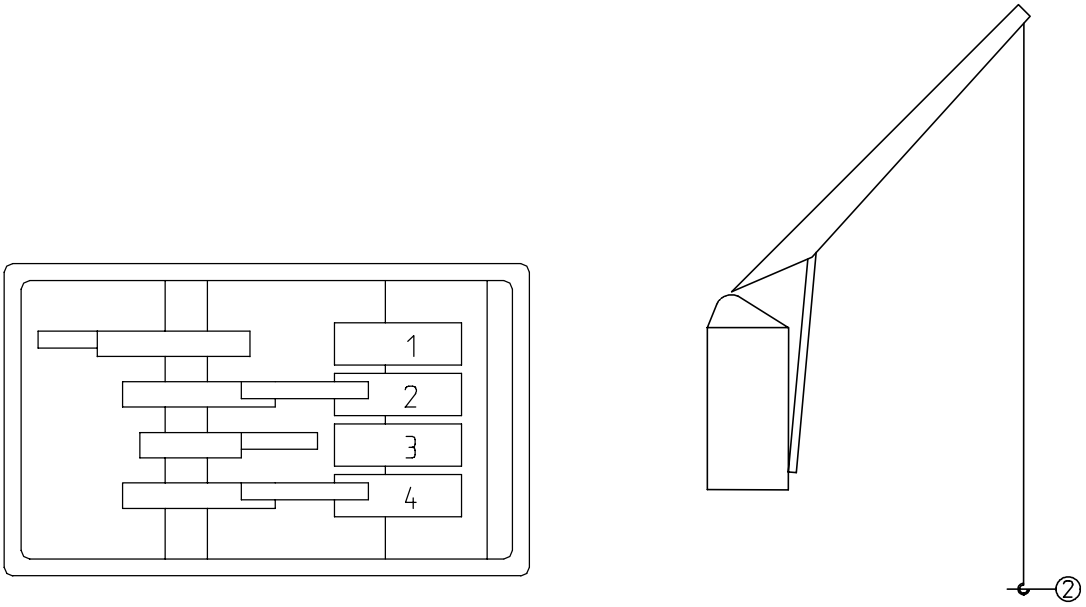

CAM DISC 3 – SPEED REDUCTION. HOISTING

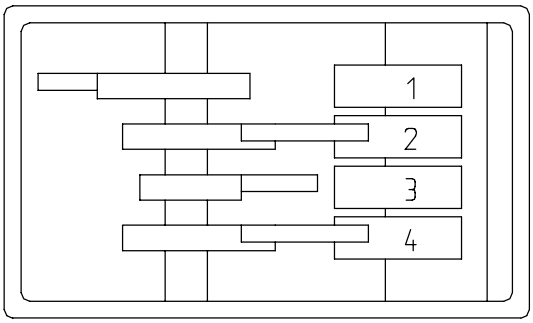

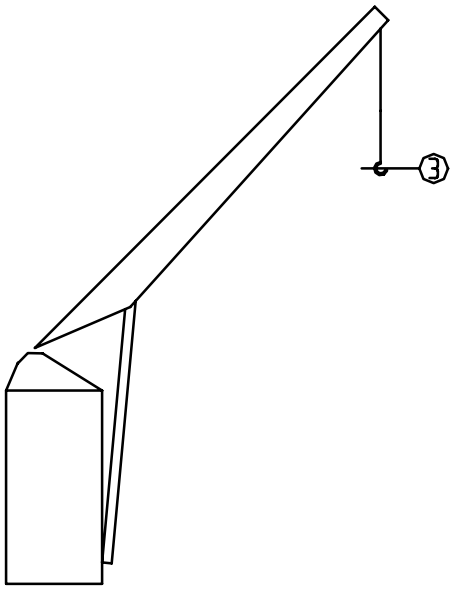

CAM DISC 4 - «FULL DRUM», STOP HOISTING

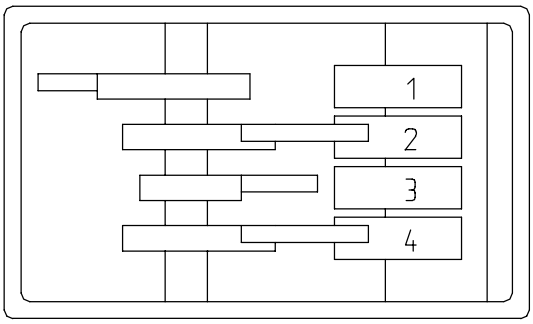

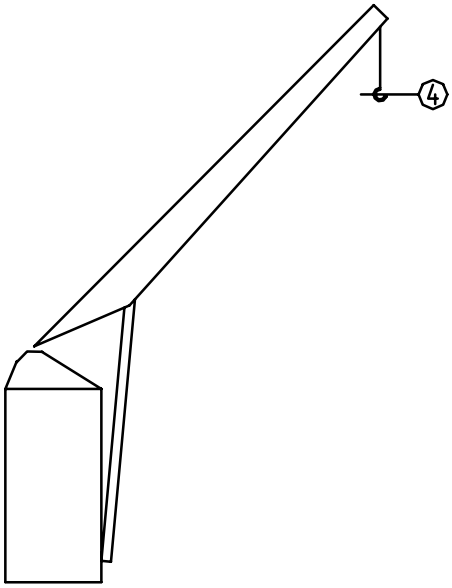

TTS-NORLIFT AS

CONTROL UNIT FOR HAWE PROP.VALVES AND ON/OFF VALVES

TYPE: NOR24uP/HAWE

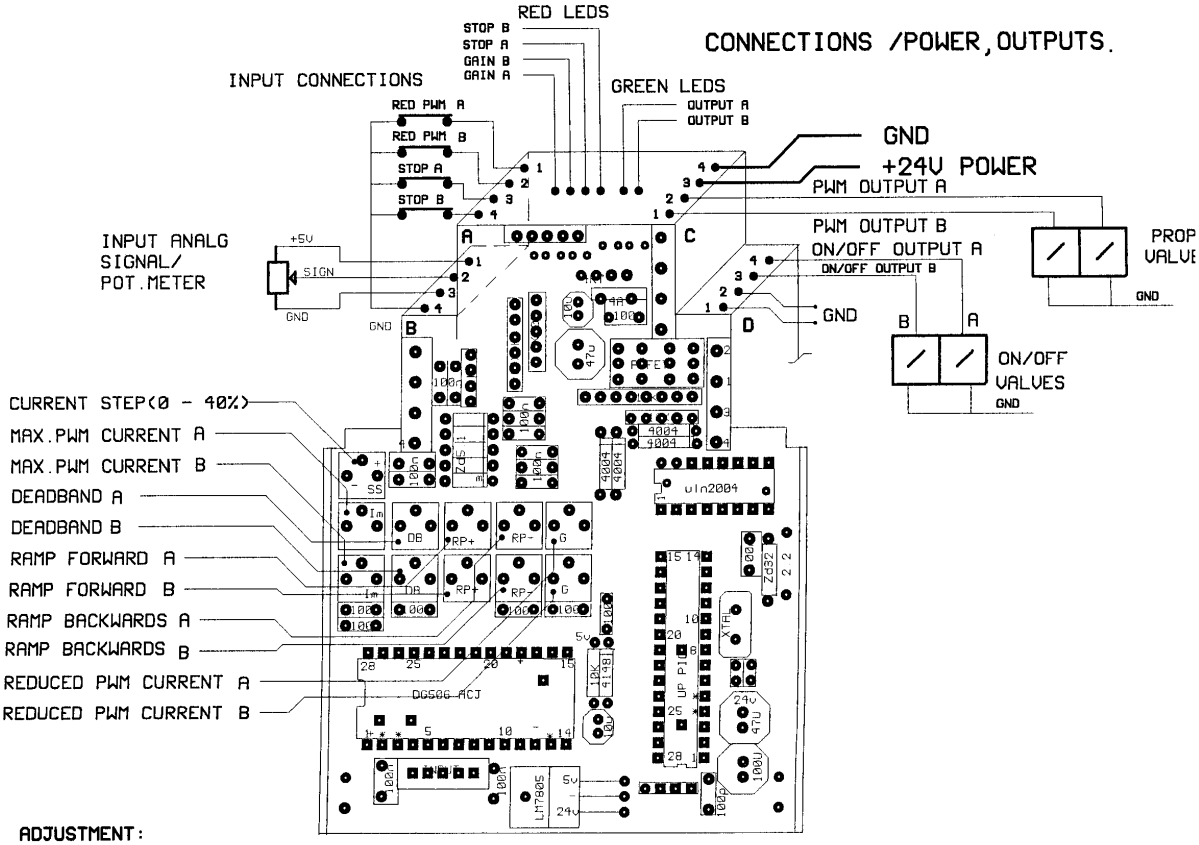

ADJUSTMENT:

1 ADJUST DEAD-BAND WITH ONE TRIM.POT. FOR EACH CHANAL
2 ADJUST CURRENT STEP (IT IS PRE-SET)
3 ADJUST MAX.PWM CURRENT WITH ONE TRIM.POT FOR EACH CHANAL
4 ADJUST RAMP "FORWARD" WITH TRIM.POT. FOR EACH CHANAL
5 ADJUST RAMP "BACKWARD" WITH TRIM.POT FOR EACH CHANAL
6 ADJUST "REDUCED PWM CURRENT" WITH TRIM.POT FOR EACH CHANAL

START CONTROL:

1 ALL RED LEDS ARE LIGHTNING.
2 THE GREEN LEDS ARE LIGHTNED WHEN OUTPUT PWM CURRENT AKTIVATES.
3 IF ALL THE RED LEDS ARE BLINKING TURN THE POWER OFF AND ON AGAIN (SAMTHING WRONG WHITH INPUTSIGNAL)
4 ALL DIG. INPUTS ARE NORMALY CONNECTED TO GND.

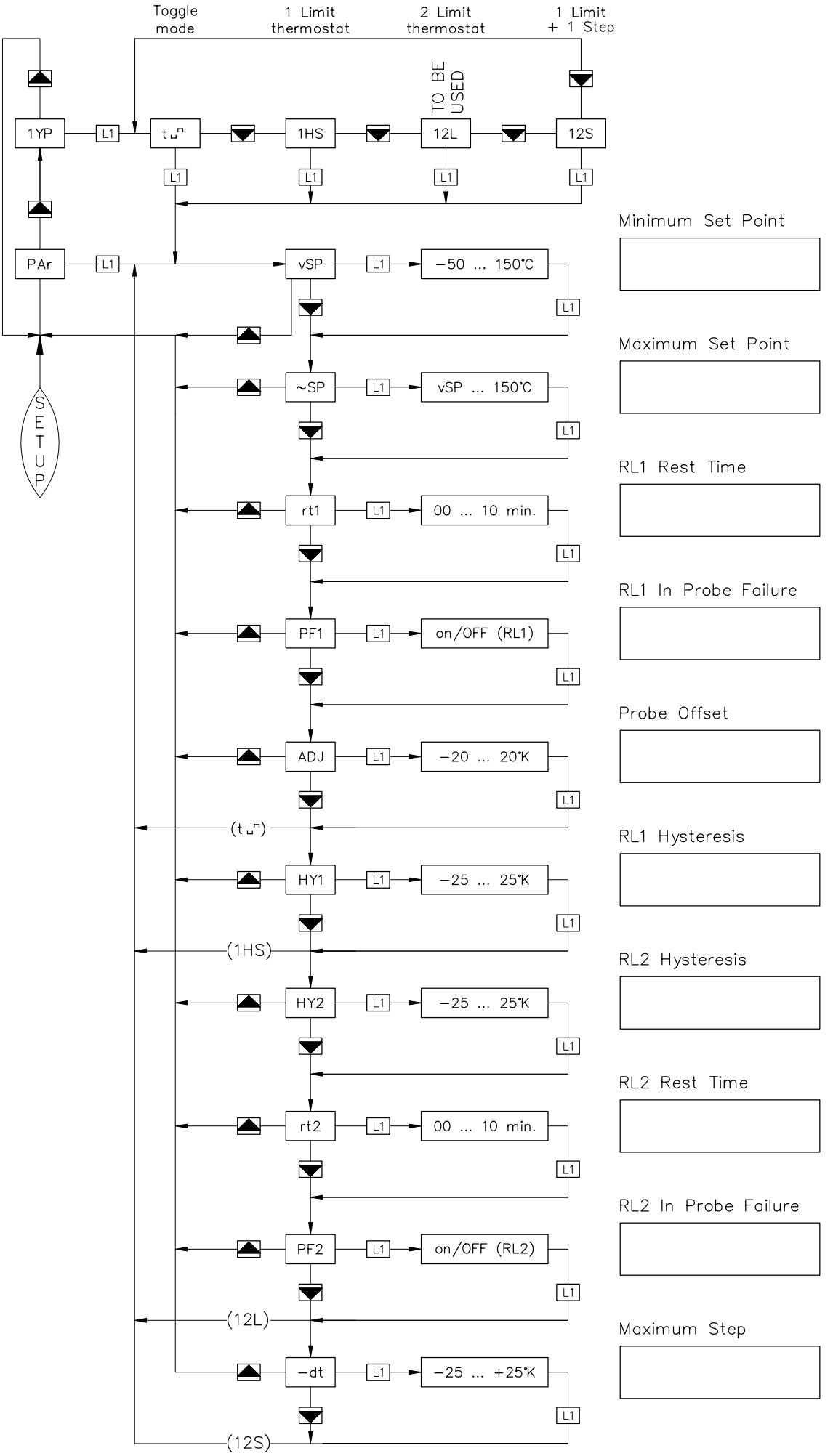
Toggle mode
1 Limit thermostat
2 Limit thermostat
1 Limit + 1 Step
TO BE USED
1YP
L1
t
1HS
12L
12S
PAr
vSP
−50 ... 150°C
Minimum Set Point
~SP
vSP ... 150°C
Maximum Set Point
SETUP
rt1
00 ... 10 min.
RL1 Rest Time
PF1
on/OFF (RL1)
RL1 In Probe Failure
ADJ
−20 ... 20°K
Probe Offset
(t)
HY1
−25 ... 25°K
RL1 Hysteresis
(1HS)
HY2
−25 ... 25°K
RL2 Hysteresis
rt2
00 ... 10 min.
RL2 Rest Time
PF2
on/OFF (RL2)
RL2 In Probe Failure
(12L)
−dt
−25 ... +25°K
Maximum Step
(12S)

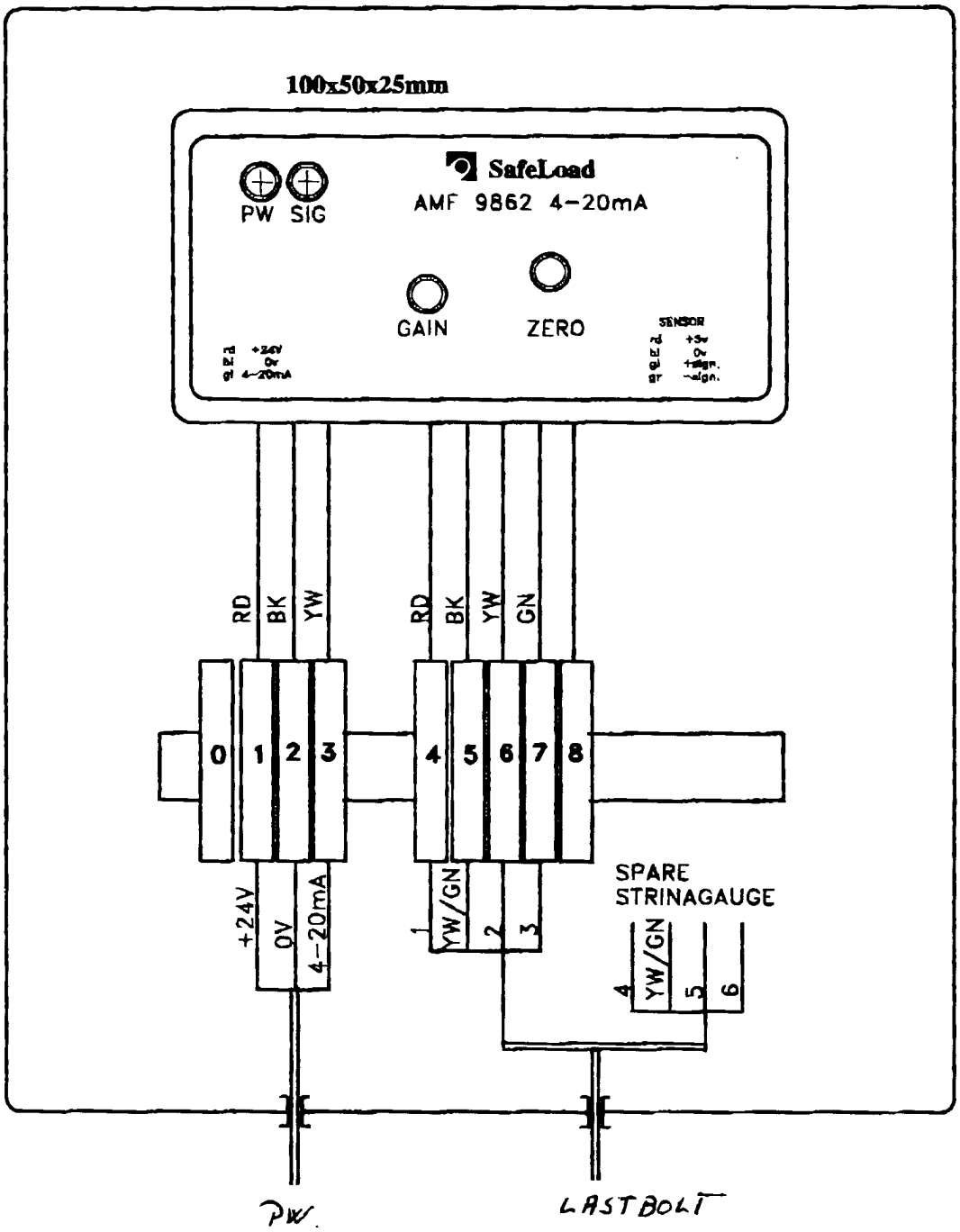
100x50x25mm
SafeLoad
AMF 9862 4-20mA
PW
SIG
GAIN
ZERO
RD
BK
YW
RD
BK
YW
GN
0
1
2
3
4
5
6
7
8
+24V
0V
4-20mA
YW/GN
SPARE
STRINAGAUGE
YW/GN
PW.
LASTBOLT

WARNING!

Where equipment has swivelling and moving parts there are potential safety hazards.
Care should be taken when working with or repairing such equipment.
If used incorrectly breakage could occur inflicting injury or death.

When equipment is in use do not put hands:

1. Between sheaves, side plates and guards.
2. In area of becket, hook, hook nut and cross head.

Take great care to avoid clothing becoming trapped.

Repair and reeving should be carried out by trained personnel only.
Power should be switched off before operations are carried out. Work should only
Take place when equipment is seated on a firm surface.

Limitation of use

1. Safe working load (SWL) should never be exceeded.
2. Crane blocks should be used in vertical lift only.
3. Rigging blocks should be used only as in design specifications.
   Blocks should not be used for towing unless specifically designed
   And marked for that purpose.
4. Swivel should be used in either vertical or horizontal plain only.
5. Horizontal and vertical lead sheaves used only as indicated in description.
6. Shock or side loading should not be applied unless equipment is designed for that purpose.
7. Load should always be in seat of hook or eye.
   NEVER AT POINT

SWIVEL CAN BE LOADED UP TO THE RATED SWL

ONLY FULLY REEVED CRANE BLOCKS CAN BE LOADED UP TO THE RATED SWL

Inspection and Maintenance

Inspection should be carried out weekly or where equipment is used infrequently,
Each time is used by the operator.

- **Every 500 operating hours or every 4 years,**
  Hook and hook nut are to be dismantled,
  Inspected and retested (proof loaded).

Thorough examination by a competent and trained person should be carried out annually on equipment for mobile and crawler cranes.
Electric overhead travelling crane blocks at each inspection and service.

Particular attention to be paid to the following:

1. Wear in hook, centre pin, becket in threads in hook and nut.
2. Play in sheave bushes or bearings.
3. Spacer bolts, nuts and lynch pins.
4. Check for cracks in welds.
5. Condition of safety catch grease nipples.
6. Wear in holes in side plates and becket.

If cracks or heavy gouges appear, the equipment should not be used and qualified opinion should be sought. If grooved and the section reduced by more than 5% the item should be replaced. Repairs should be by grinding. **NO** welding should be carried out unless prior authority is obtained from TTS-Norlift AS.

If the holes in cross head, side plates, becket, eyes or yaws are enlarged by more than 5%, the part should be replaced. Any parts to be replaced should be purchased from TTS-Norlift AS., or manufactured under their instruction.
All repairs to be carried out by responsible personnel and great care should be taken in the reassembly of the equipment and captivating parts i.e., grub screws, lynch pins, etc.
Check and refit only correct sizes and threads.

Lubrication

As a general rule sheaves, cross heads and bodies should be oiled through nipples:

1. Each month crane blocks.
2. Each week for frequently used mobile and crawler crane blocks, lead sheaves and swivel, monthly for frequently used equipment or each time it is used.
3. Double sealed or shielded bearings do not require lubrication.

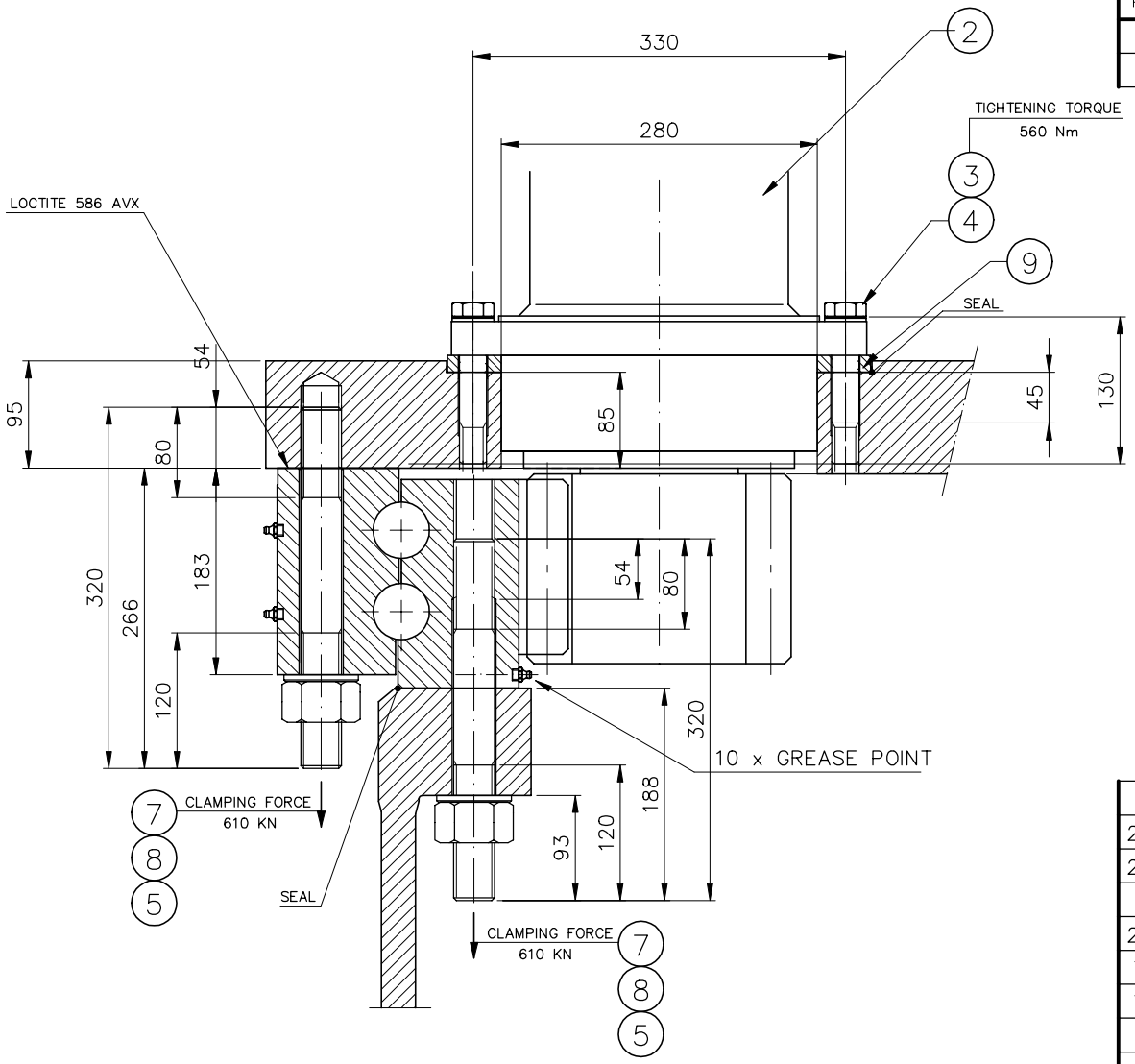

REV	ALTERATION	DATE / SIGN
1	RELEASED FOR PRODUCTION	JHE–15.12.99
2	CHANGED GEAR	JHE–27.12.99

INSTALLATION

THE OUTER RING IS MARKED WITH AN "S" NEAR THE TYPE PLATE OR FILLER PLUG, INDICATING THE HARDENING GAP IN THE RACWAY. THIS GAP SHOULD BE POSITIONED APPROX. 90° TO THE MAIN LOADING AXIS.

THE GEARRING IS MARKED WITH PAINT ON THREE TEETHS INDICATING WHERE TO MESH THE BACKLASH BETWEEN GEARRING AND PINION.

BEFORE MOUNTING TO THE SLEWING COLUMN, THE UPPER CONTACT SURFACE OF THE BEARING HAS TO BE CLEANED FREE OF PAINT, TECTYL ETC, AND LOCTITE 586 AVX HAS TO BE APPLIED ON THE FULL CONTACT AREA.

SLEWING GEAR SHALL BE MOUNTED WITH THE MAX ECCENTRICITY MARK AS INDICATED ON DRAWING. CORRECT BACKLASH SHALL BE OBTAINED AFTER POSITIONING AND FASTENING OF SLEWING GEAR BY MOVING THE SLEW BEARING / SLEWING COLMN. BACKLASH TO BE 0.48–0.64 mm

USE FLUID GASKET, LOCTITE 574 OR EQUAL, AS SEAL BETWEEN GEARBOX FLANGE AND FOUNDATION AND BETWEEN BEARING AND BASE COLUMN RING FLANGE.

SLEWING RING BOLTS TO BE TIGHTENED WITH HYDRAULIC TENSION TOOL TO A CLAMPING FORCE OF 610 KN
CROSS TICHTENING TO BE USED, SEE ILLUSTRATION OF TIGHTENING SEQUENCE.

BACKLASH ADJUSTMENT

ONLY TO BE USED IF BACKLASH HAVE CHANGED DUE TO SETTING OR TO COMPENSATE FOR WEAR ON PINION AND GEARING.

ΔE = CHANGE IN BACKLASH ACCORDING TO NO. OF HOLES TURNED

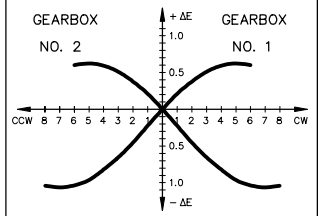

LUBRICATION

GEARBOX IS FILLED WITH AVIA HYPOID 90EP OIL OR EQUIVALENT PRIOR TO DELVERY. OIL LEVEL TO BE CHECKED AFTER ASSEMBLING OF SLEWING MACHINERY.

BRAKE TO BE FILLED WITH 0.2 ltr HYDRAULIC OIL PRIOR TO MOUNTING OF MOTOR.

BEARING RACEWAY TO BE REGREASED (AT ALL GREASE NIPPLES) WHEN MOUNTING, USING GREASE TYPE MOBILUX EP2 OR EQUIVALENT.
GEARRING TO BE CLEANED AND GREASED WHEN MOUNTING USING GREASE TYPE MOBILTAC 81 OR EQUIVALENT.

TIGHTENING SEQUENCE

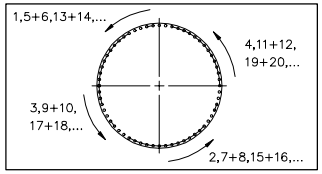

TOTAL WEIGHT APPROX [kg] ~ 4633

NOS	ITEM / DIMENSION		POS	MATR / DRWG / ART NO	WEIGHT
3	FOUNDATION RING		9	A4–7061	21
200	WASHER, DIN 6916 MOD.	ø37/66	8		14
200	NUT, DIN 6915–10 MOD.	M36	7		122
10	GREASE NIPPLE ARR.		6	A4–1075	–
200	STUD BOLT, DIN 938–10.9 MOD.	M36x320	5		480
72	HEX SCREW, DIN 931–10.9	M20x130	4		25
72	WASHER, HB 200	ø21/30	3		1
3	SLEWING GEAR	Item 309	2	Hydr. Circuit	1100
1	SLEW BEARING	2000 tm	1	ACC. COMP. SPEC.	2870

THIS DRAWING IS THE PROPERTY OF TTS–NORLIFT %s AND MUST NOT BE REPRODUCED WITHOUT OUR WRITTEN CONSENT

DRAWN BY JHE 15.12.99 | CHECKED BY | APPR BY

PROJECT
CRANE 2000 TM
3 x ZHP 3.24

TTS - Norlift AS
MARINE CARGO GEAR

DRWG NAME
SLEWING MACH. ASSEMBLY

SCALE 1:5 E

DRWG NO A3–9069 REV 2

MASTER DRWG | REPLACED BY | REPLACES

PLANETARY GEAR

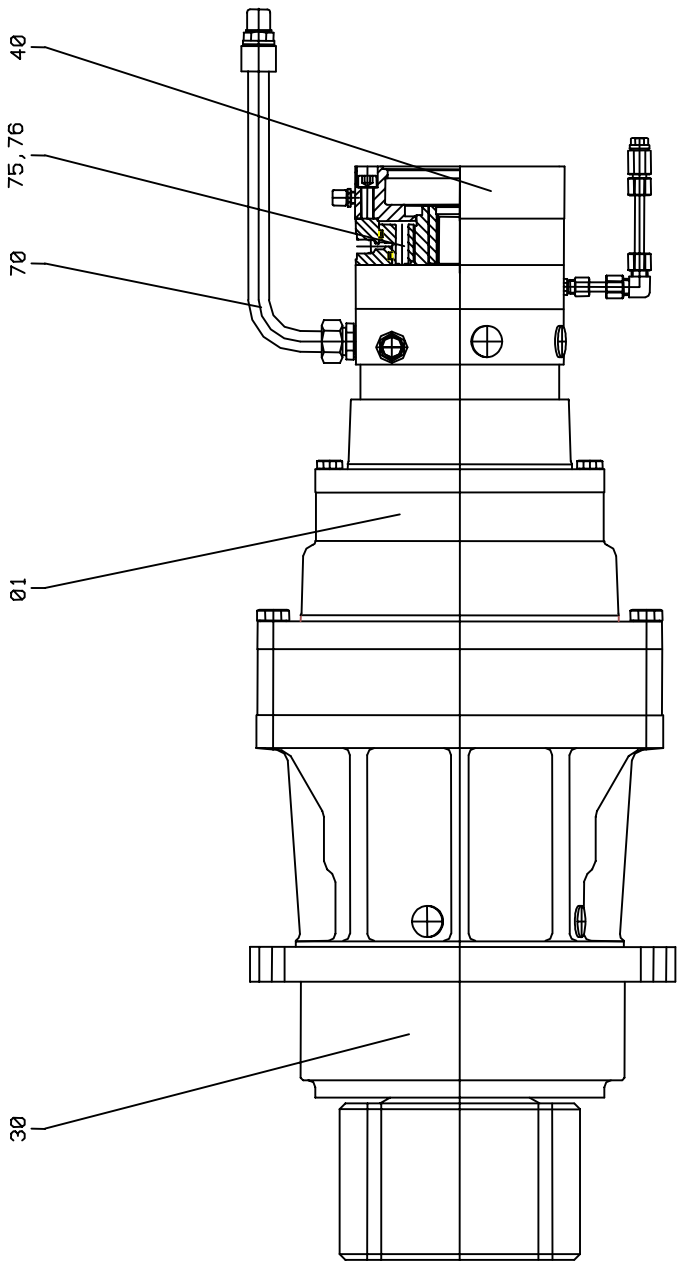

NOTE!
When ordering spare parts,
or in any correspondance relating to the gearbox,
the number stamped on the gearbox nameplate
must be quoted.

PLANETARY STAGE

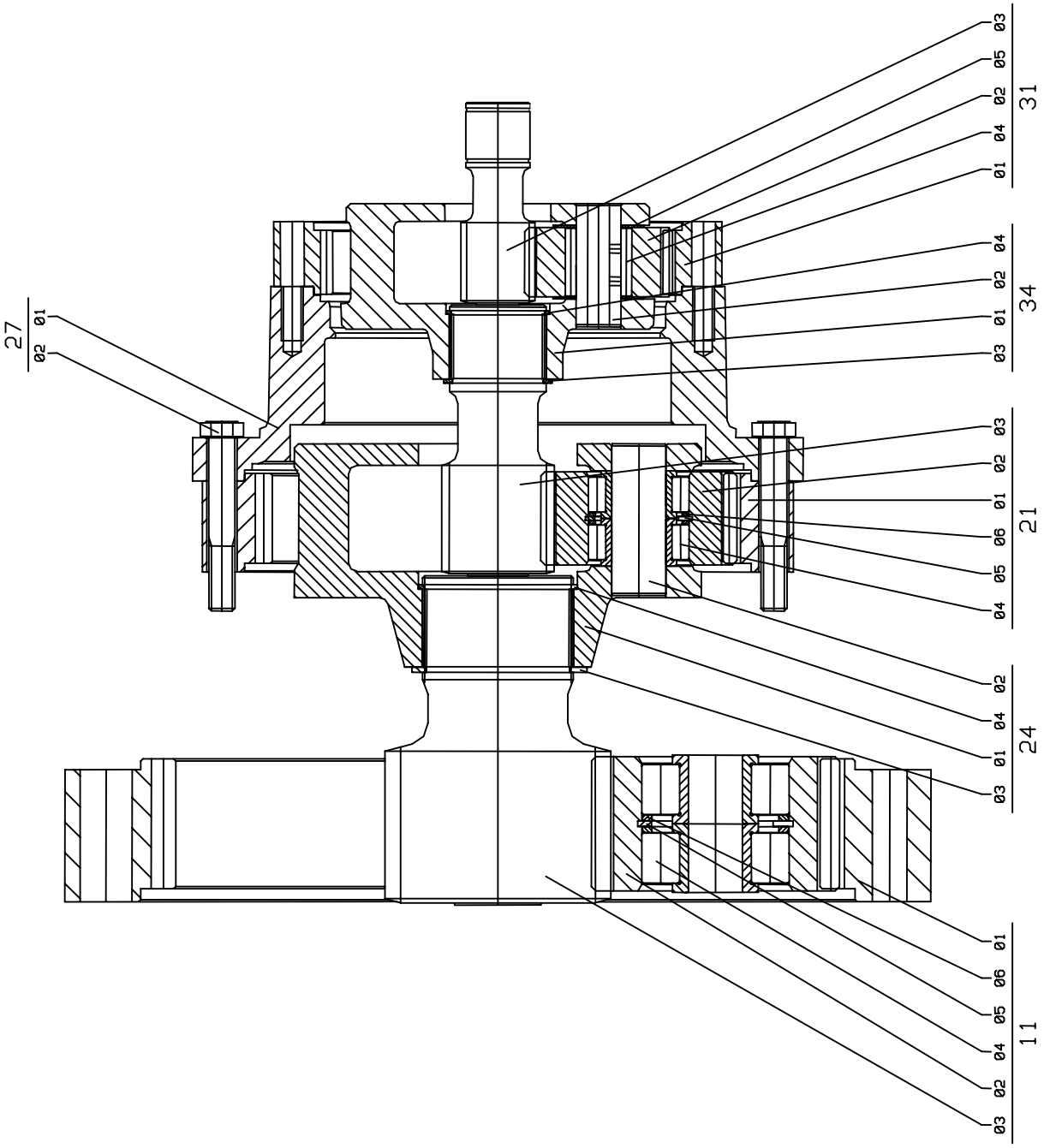

NOTE!
When ordering spare parts,
or in any correspondance relating to the gearbox,
the number stamped on the gearbox nameplate
must be quoted.

OUTPUT HOUSING

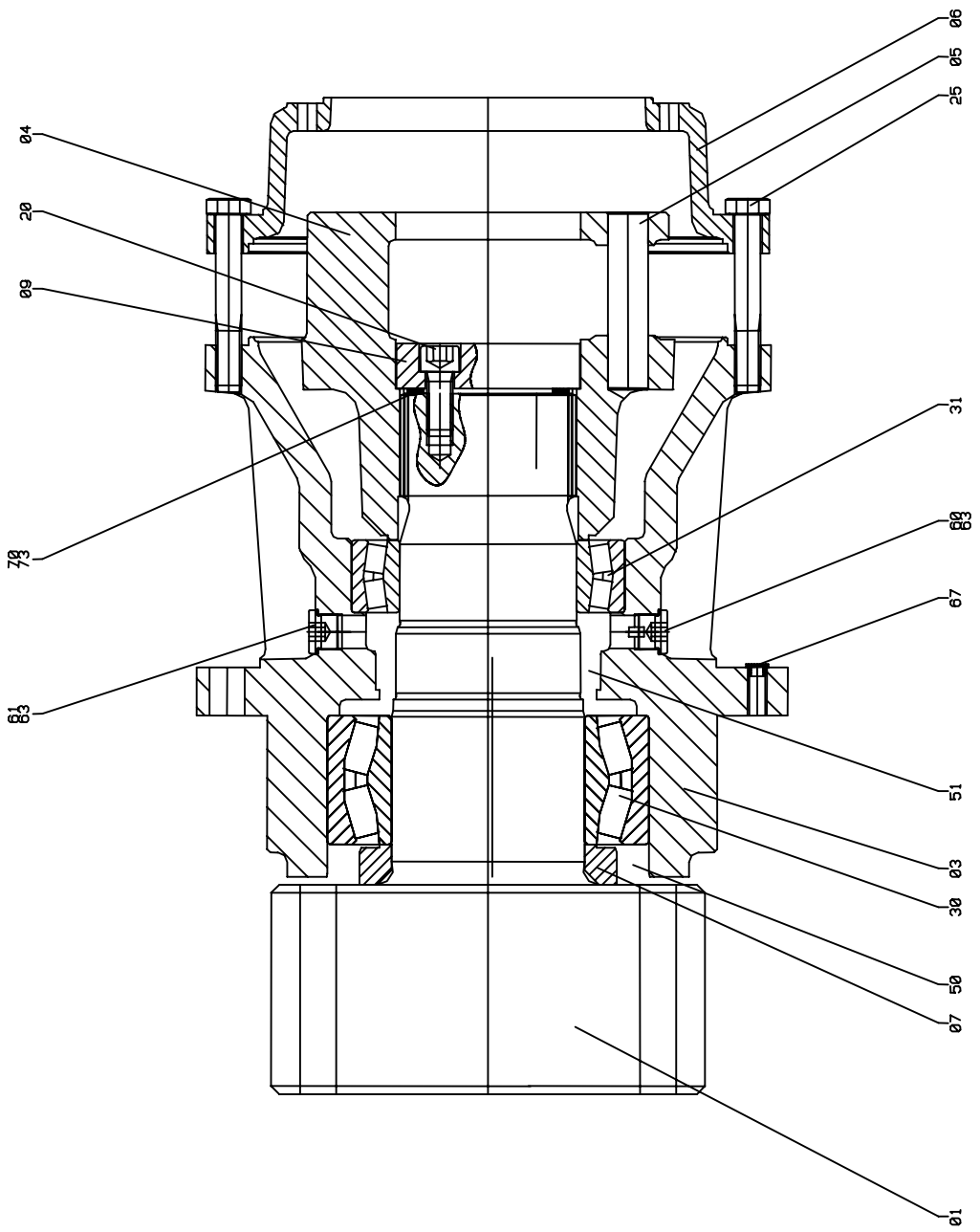

NOTE!
When ordering spare parts,
or in any correspondance relating to the gearbox,
the number stamped on the gearbox nameplate
must be quoted.

DRIVE IN

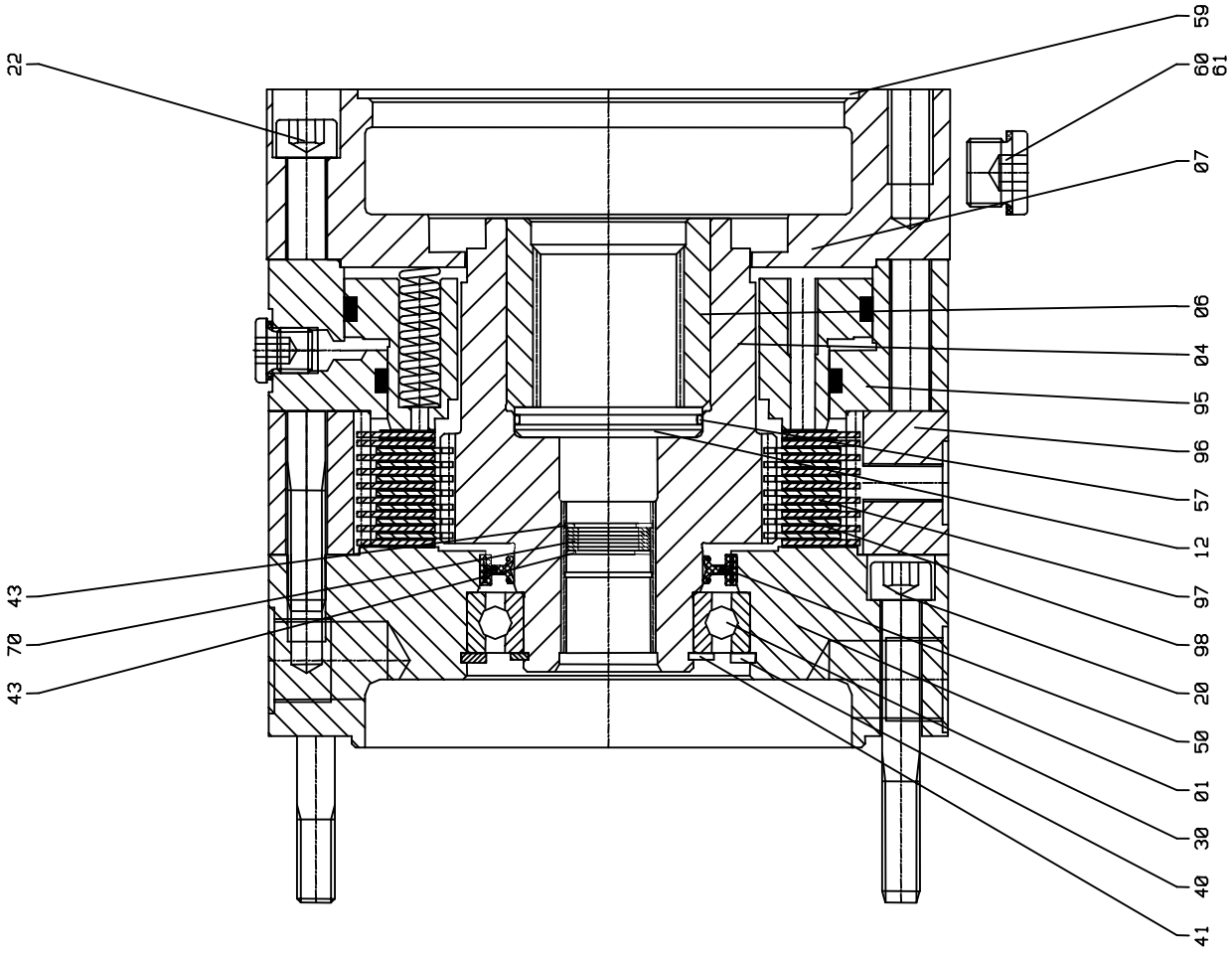

NOTE!
When ordering spare parts,
or in any correspondance relating to the gearbox,
the number stamped on the gearbox nameplate
must be quoted.

HYDRAULIC MULTIPLE BRAKE

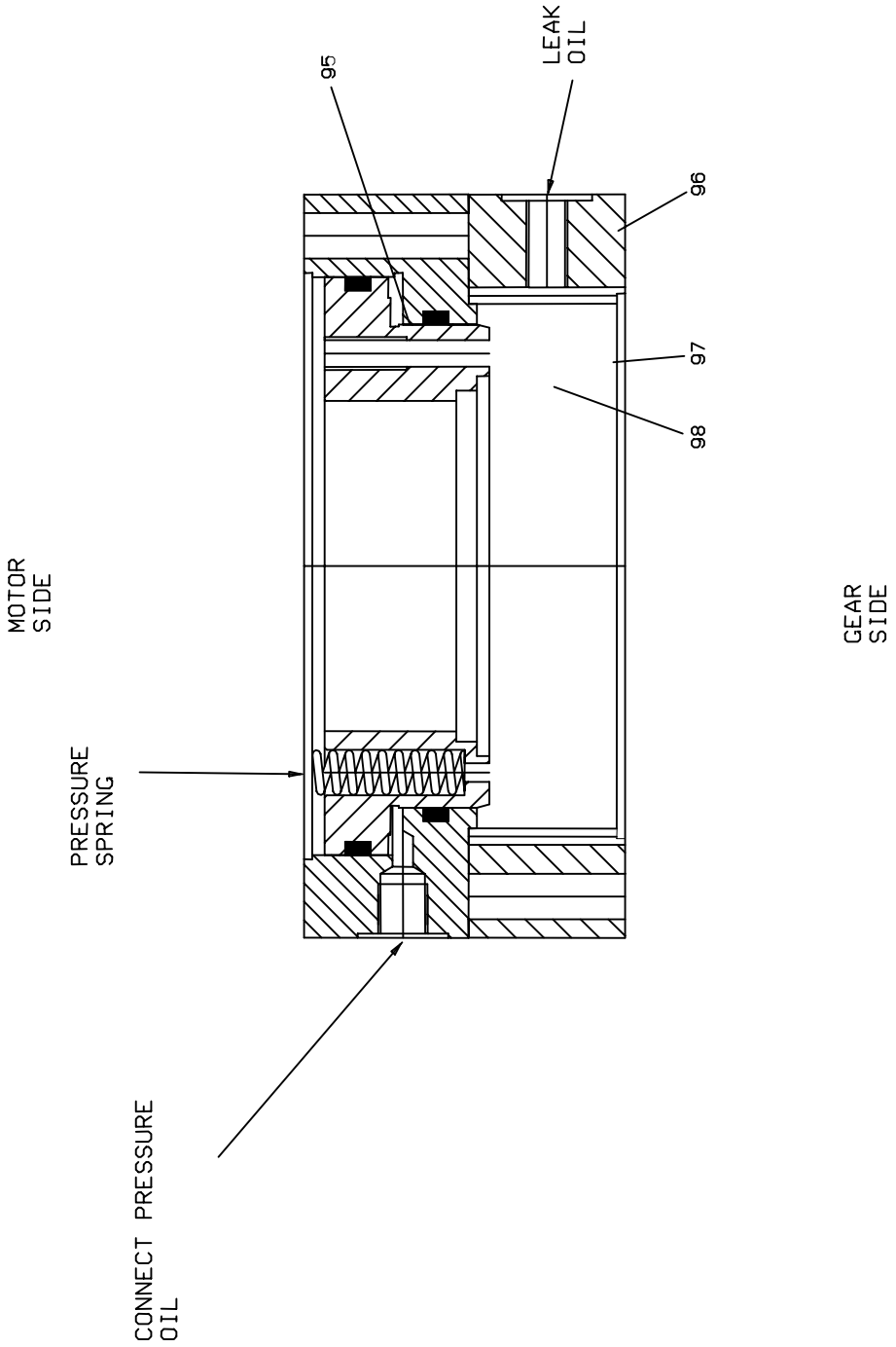

NOTE!
When ordering spare parts,
or in any correspondance relating to the gearbox,
the number stamped on the gearbox nameplate
must be quoted.

OIL PIPE

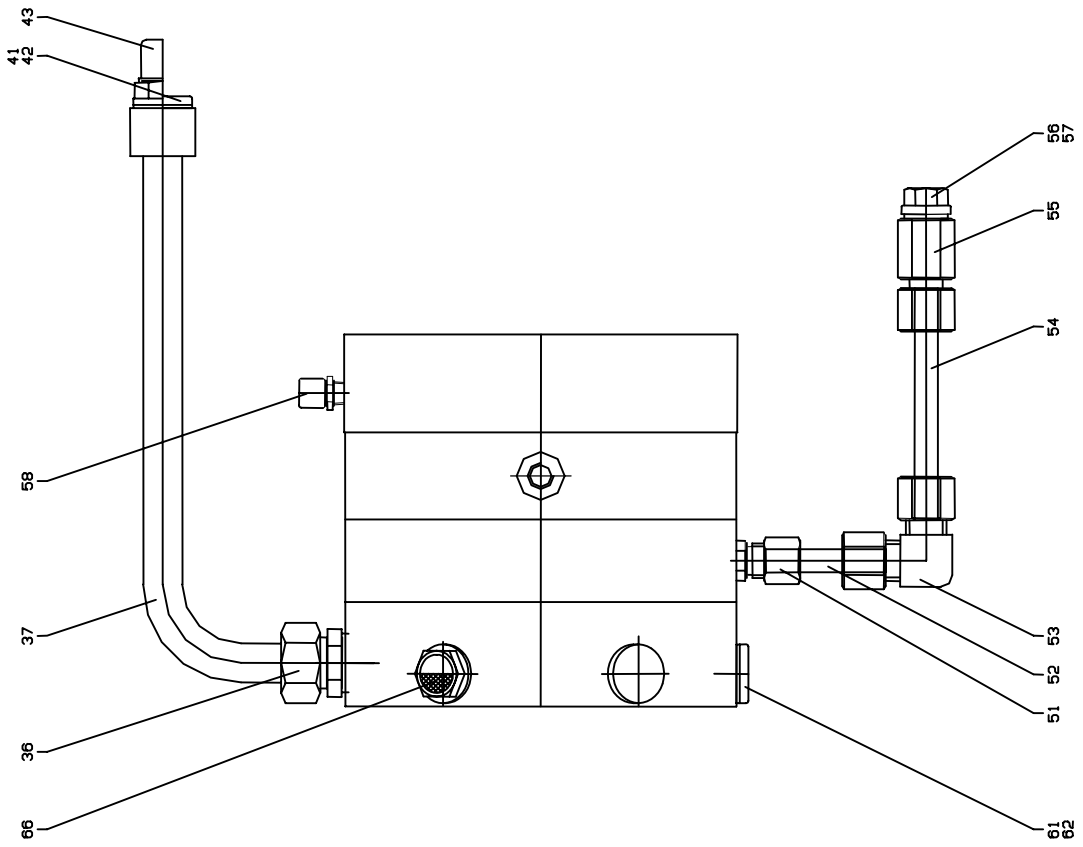

NOTE!
When ordering spare parts,
or in any correspondance relating to the gearbox,
the number stamped on the gearbox nameplate
must be quoted.

S P A R E - P A R T - L I S T

		WEIGHT	OIL QTY
SERIAL - NO.	104 - 112	276,0 KG	9,7 LITER

POS-NO.	QTY	DESCRIPTION - ENGLISH	TECHNICAL - DATA	
1	1,0	PLANETARY STAGE		
1/ 11	1,0	PLANETARY STAGE		
1/ 11/ 1	1,0	INTERNAL-WHEEL		
1/ 11/ 2	3,0	PLANETARY WHEEL		
1/ 11/ 3	1,0	SUN WHEEL		
1/ 11/ 4	6,0	CYLINDER ROLLER BEARING	30X 60,49X28/	
1/ 11/ 5	3,0	CIR CLIP	---,--X 60,00X 2,00	DIN 472
1/ 11/ 6	6,0	WASHER	55,30X 60,00X 3,25	
1/ 21	1,0	PLANETARY STAGE		
1/ 21/ 1	1,0	INTERNAL-WHEEL		
1/ 21/ 2	3,0	PLANETARY WHEEL		
1/ 21/ 3	1,0	SUN WHEEL		
1/ 21/ 4	6,0	CYLINDER ROLLER BEARING	20X 40,70X19/	
1/ 21/ 5	3,0	CIR CLIP	---,--X 41,00X 1,75	DIN 472
1/ 21/ 6	6,0	WASHER	36,00X 40,50X 2,35	
1/ 24	1,0	PLANETARY CARRIER		
1/ 24/ 1	1,0	PLANETARY CARRIER		
1/ 24/ 2	3,0	PLANETARY AXLE		
1/ 24/ 3	1,0	CIR CLIP	65,00X---,--X 2,50	DIN 471
1/ 24/ 4	1,0	CIR CLIP	65,00X---,--X 1,50	
1/ 27	1,0	INTERMEDIATE HOUSING		
1/ 27/ 1	1,0	INTERMEDIATE HOUSING		
1/ 27/ 2	18,0	HEXAGON BOLT	M 12X 80 ZN 8.8	DIN 931
1/ 31	1,0	PLANETARY STAGE		
1/ 31/ 1	1,0	INTERNAL-WHEEL		
1/ 31/ 2	3,0	PLANETARY WHEEL		
1/ 31/ 3	1,0	SUN WHEEL		
1/ 31/ 4	72,0	NEEDLE ROLLER	3,0X23,8 G2	TYP LRB
1/ 31/ 5	6,0	WASHER	20,00X 35,00X 1,00	
1/ 34	1,0	PLANETARY STAGE		
1/ 34/ 1	1,0	PLANETARY CARRIER		
1/ 34/ 2	3,0	PLANETARY AXLE		
1/ 34/ 3	1,0	CIR CLIP	35,00X---,--X 1,50	DIN 471
1/ 34/ 4	1,0	CIR CLIP	35,00X---,--X 1,50	

NOTE!
When ordering spare parts,
or in any correspondance relating to the gearbox,
the number stamped on the gearbox nameplate
must be quoted.

POS-NO.	QTY	DESCRIPTION - ENGLISH	TECHNICAL - DATA	
30	1,0	LONG OUTPUT HOUSING		
30/ 1	1,0	PINION SHAFT		
30/ 3	1,0	OUTPUT HOUSING		
30/ 4	1,0	PLANETARY CARRIER		
30/ 5	3,0	PLANETARY AXLE		
30/ 6	1,0	INTERMEDIATE HOUSING		
30/ 7	1,0	RING		
30/ 9	1,0	HOLDING DISC		
30/ 20	3,0	CYLINDRICAL SCREW	M 16X 40 ZN 8.8	DIN 912
30/ 25	18,0	HEXAGON BOLT	M 16X110 ZN 8.8	DIN 931
30/ 30	1,0	PENDULUM ROLLER BEARING	120X200X 80	DIN 635
30/ 31	1,0	PENDULUM ROLLER BEARING	110X170X 45	DIN 635
30/ 50	1,0	SHAFT SEALING RING	160X200X15 BASL NBR	DIN3760
30/ 51	2,0	SHAFT SEALING RING	115X140X12 BA NBR	DIN3760
30/ 60	1,0	PLUG	M 22X 1,5 ZN MAGN.	DIN 908
30/ 61	3,0	PLUG	M 22X 1,5 ZN	DIN 908
30/ 63	4,0	SEALING RING	A 22X 27X1,5	DIN7603
30/ 67	4,0	SEALING PLUG	---,--X 10,70X 5,50	5
30/ 70	3,0	WASHER	80,00X100,00X 1,00	DIN 988
30/ 73	2,0	WASHER	80,00X100,00X 0,20	DIN 988
40	1,0	DRIVE IN		
40/ 1	1,0	BRAKE FLANGE		
40/ 4	1,0	DRIVING SLEEVE		
40/ 6	1,0	SLEEVE		
40/ 7	1,0	MOTOR FLANGE		
40/ 12	1,0	WASHER		
40/ 20	6,0	CYLINDRICAL SCREW	M 10X 80 ZN 8.8	DIN 912
40/ 22	12,0	CYLINDRICAL SCREW	M 10X120 ZN 8.8	DIN 912
40/ 30	1,0	BALL BEARING	45X 75X16	DIN 625
40/ 40	1,0	CIR CLIP	---,--X 75,00X 2,50	DIN 472
40/ 41	1,0	CIR CLIP	45,00X---,--X 1,75	DIN 471
40/ 43	2,0	CIR CLIP	---,--X 23,00X 1,20	DIN 472
40/ 50	1,0	SHAFT SEALING RING	50X 68X 8 BA NBR	DUO
40/ 57	1,0	SEALING RING	47,00X2 NBR-72	
40/ 59	1,0	SEALING RING	126,00X3 NBR-72	
40/ 60	1,0	PLUG	M 18X 1,5 ZN	DIN 908
40/ 61	1,0	SEALING RING	A 18X 22X1,5	DIN7603
40/ 70	16,0	WASHER	16,00X 22,00X 1,00	DIN 988
40/ 95	1,0	HYDR.-PART FOR DISC BRAKE		
40/ 96	1,0	CLUTCH PLATE CARRIER		
40/ 97	9,0	MULTIPLE DISK	DIN5480RAD-NUT-L2,30	
40/ 98	7,0	MULTIPLE DISK	DIN 867--------L1,45	

NOTE!
When ordering spare parts,
or in any correspondance relating to the gearbox,
the number stamped on the gearbox nameplate
must be quoted.

POS-NO.	QTY	DESCRIPTION - ENGLISH	TECHNICAL - DATA	
70	1,0	OIL CONTROL		
70/ 36	2,0	THREADED JOINT CONNECTION	M 22X 1,5 ED-160B	
70/ 37	2,0	OIL PIPE		
70/ 41		SEALING RING	A 22X 27X1,5	DIN7603
70/ 42	2,0	PLUG	M 22X 1,5 ZN	DIN 908
70/ 43	2,0	VENT FILTER	0,2 BAR	M22*1,5
70/ 51	1,0	THREADED JOINT CONNECTION	M 10X 1,0 K-100B	
70/ 52	1,0	PIPE		
70/ 53	1,0	THREADED JOINT CONNECTION		
70/ 54	1,0	PIPE		
70/ 55	1,0	THREADED JOINT CONNECTION	M 12X 1,5 250B	
70/ 56	1,0	SEALING RING	A 12X 16X1,5	DIN7603
70/ 57	1,0	PLUG	M 12X 1,5 ZN	DIN 910
70/ 58	1,0	VENT FILTER	0,04 BAR MESSING	M10*1,0
70/ 61	2,0	SEALING RING	A 22X 27X1,5	DIN7603
70/ 62	2,0	PLUG	M 22X 1,5 ZN	DIN 908
70/ 66	2,0	OIL SIGHT GLASS	WEICHEISEN /-30+120	
75	14,0	SPRINGS		
75/ 1	14,0	SPRINGS		
76	14,0	SPRINGS		
76/ 1	14,0	SPRINGS		

*** END OF PART LIST

NOTE!
When ordering spare parts,
or in any correspondance relating to the gearbox,
the number stamped on the gearbox nameplate
must be quoted.

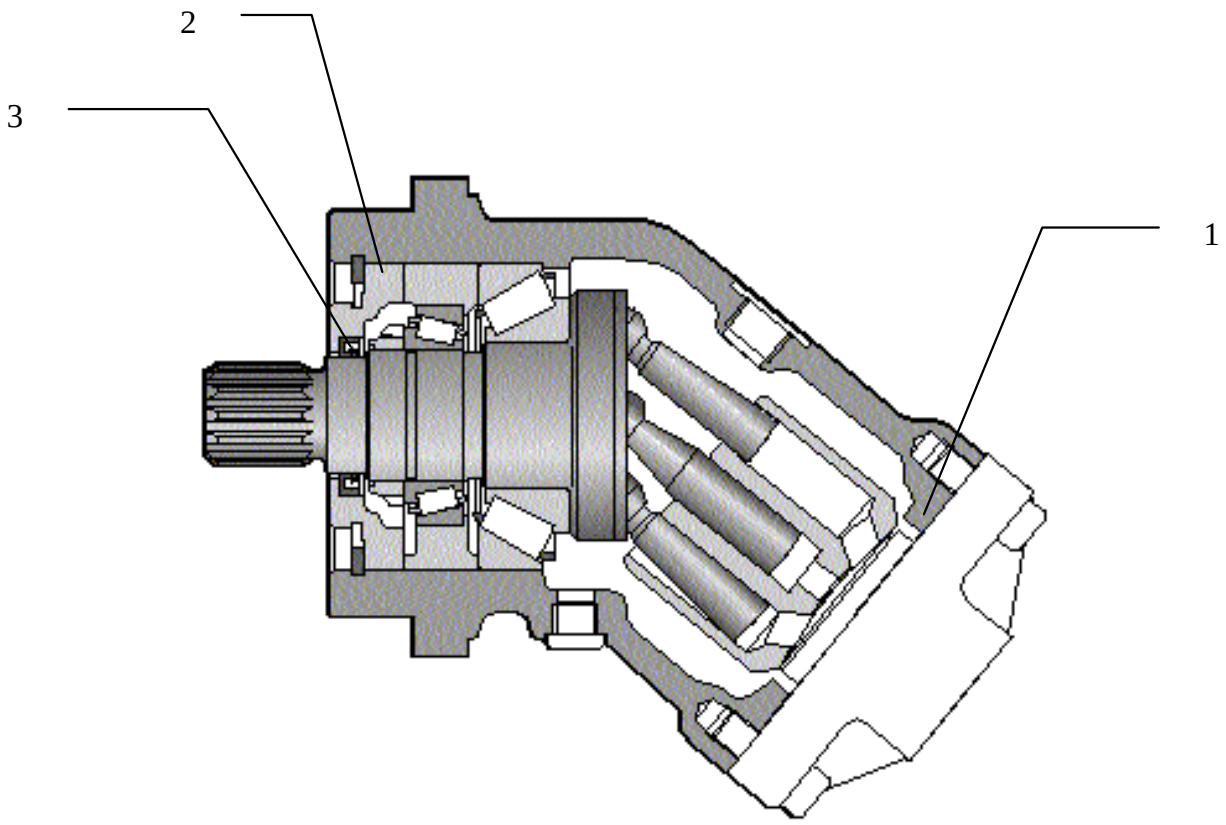

SEAL KIT CONSISTING OF GASKET POS. 1-2-3.

NOTE! REPLACEMENT PARTS IN THE MOTOR CAN NOT BE SUPPLIED.

REV	ALTERATION	SIGN / DATE
1	RELEASED FOR INSTRUCTION MANUAL	LI 04.05.2001

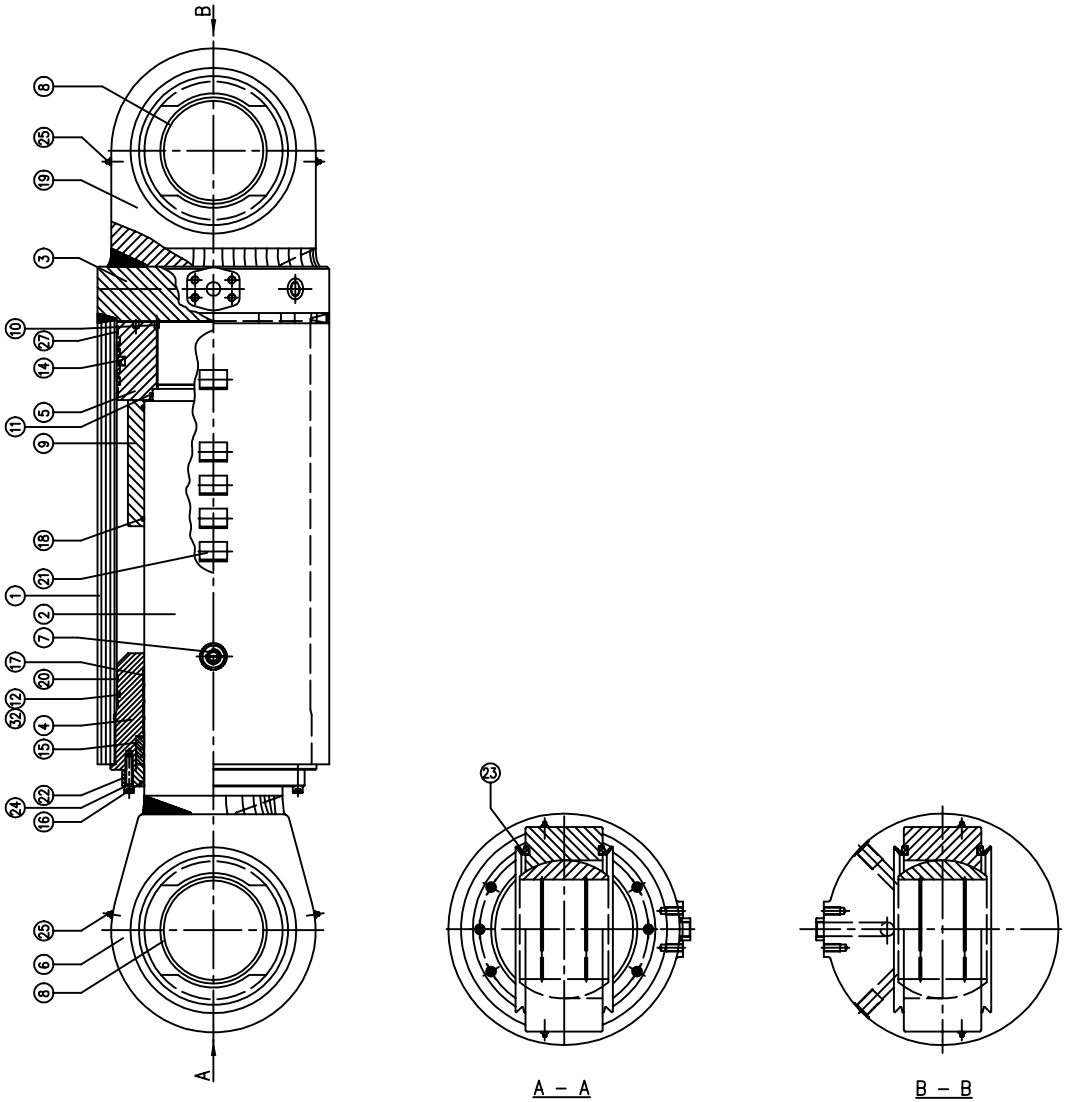

NOS	ITEM / DIMENSION	POS	MATR / DRWG / ART NO	WEIGHT
5	Welded plate	29		
		28		
2	Guide–ring 2,5x15 L=1115	27		
		26		
4	Grease nipple M10x1	25		
16	Screw M12x50	24	12,9	
4	V–seal	23	NBR	
1	Gland	22	JM1–15	
5	Bracket <35x35x3 L=50	21	St. 37,2	
2	Guide ring 2,5x9,7 L=1101	20	ST. 37,2	
1	Bottom ear	19	St. 52,3N	
2	O–ring	18	NBR	
4	Guid ring 2,5x25 L=818	17		
1	Dirt wiper	16		
1	Piston rod seal	15		
1	Piston seal	14	NBR	
		13		
1	O–ring	12	NBR	
1	O–ring	11	NBR	
1	Locking screw M8x12	10	DIN 916	
1	Distance ring	9	St. 52,3N	
2	Spherical bearing	8	JM 3–15	
1	Connection 1" BSP	7	St. 52,3N	
1	Piston rod ear	6	St. 52,3N	
1	Piston	5	St. 52,3N	
1	Stuffing box	4	St. 52,3N	
1	Bottom	3	St. 52,3N	
1	Piston rod	2	St. 52,3N	
1	Cylinder barrel	1	St. 52,3N	

NOS	ITEM / DIMENSION	POS	MATR / DRWG / ART NO	WEIGHT
1	Back–up ring	32		
		31		
		30		

THIS DRAWING IS THE PROPERTY OF TTS–NORLIFT % AND MUST NOT BE REPRODUCED WITHOUT OUR WRITTEN CONSENT

DRAWN BY LI 04.05.2001 | CHECKED BY | APPR BY

PROJECT: Crane no: 2078

TTS - Norlift AS
MARINE CARGO GEAR

DRWG NAME: LUFFING CYLINDER SPARE PART LIST

SCALE: 1:5 E

DRWG NO: A3–10373 REV: 1

MASTER DRWG: 634–57A | REPLACED BY | REPLACES

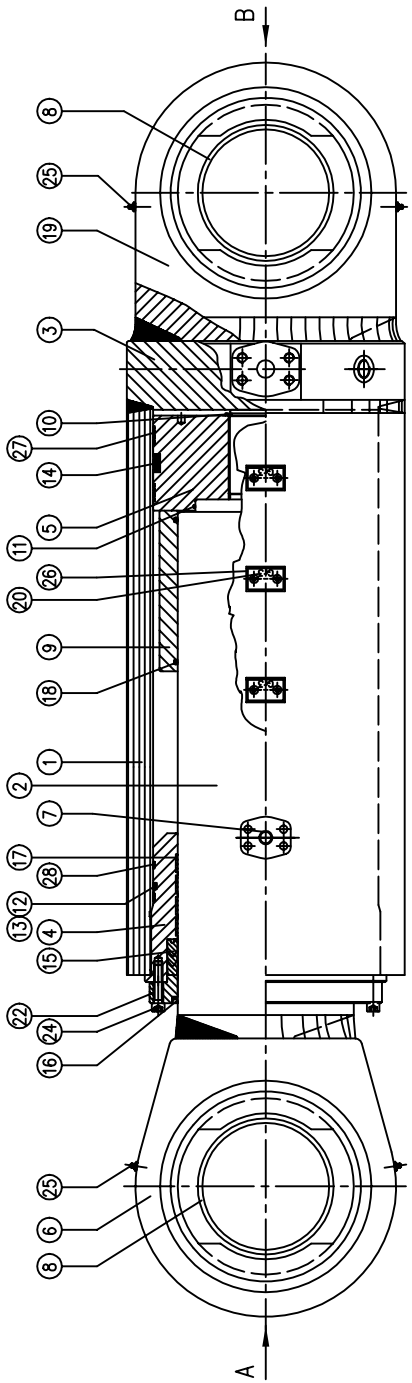

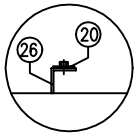

Fig.A
DETALJ OF BRACKET

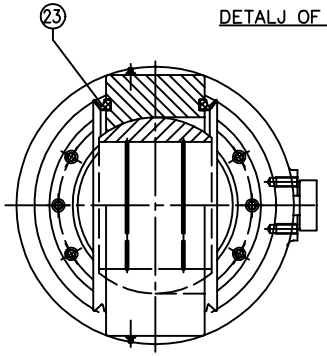

A – A

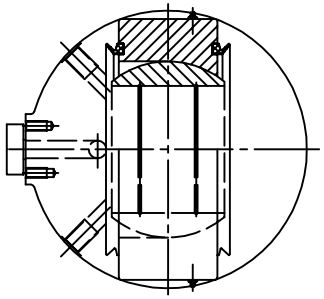

B – B

REV	ALTERATION	SIGN / DATE
1	RELEASED FOR INSTRUCTION MANUAL	LI 04.05.2001

NOS	ITEM / DIMENSION		POS	MATR / DRWG / ART NO	WEIGHT
2	Guide–ring	2,5x9,7 L=995	28		
2	Guide–ring	2,5x15 L=1022	27		
3	Bracket	<35x35x3 L=55	26	St. 37.2	
4	Grease nipple	M10x1	25		
16	Screw	M12x50	24	12,9	
4	V–seal		23	NBR	
1	Gland		22	JM1–15	
			21		
3	Welded plate		20		
1	Bottom ear		19	St. 52,3N	
2	O–ring		18	NBR	
4	Guid ring	2,5x25 L=818	17		
1	Dirt wiper		16		
1	Piston rod seal		15		
1	Piston seal		14	NBR	
1	Back–up ring	310–320	13		
1	O–ring		12	NBR	
1	O–ring		11	NBR	
1	Locking ring	SEA 100	10	DIN 471	
1	Distance ring		9	St. 52,3N	
2	Spherical bearing		8	JM 3–15	
1	Flange 3/4"		7	SAE–6000 PSI	
1	Piston rod ear		6	St. 52,3N	
1	Piston		5	St. 52,3N	
1	Stuffing box		4	St. 52,3N	
1	Bottom		3	St. 52,3N	
1	Piston rod		2	St. 52,3N	
1	Cylinder barrel		1	St. 52,3N	

THIS DRAWING IS THE PROPERTY OF TTS–NORLIFT % AND MUST NOT BE REPRODUCED WITHOUT OUR WRITTEN CONSENT

DRAWN BY LI 04.05.2001 | CHECKED BY | APPR BY

PROJECT: Crane no: 2078

TTS - Norlift AS
MARINE CARGO GEAR

DRWG NAME: FOLDING CYLINDER SPARE PART LIST

SCALE: 1:5 | E

DRWG NO: A3–10372 | REV: 1

MASTER DRWG: 645–04 | REPLACED BY | REPLACES

REV	ALTERATION	DATE / SIGN
1	RELEASED FOR PRODUCTION	15.07.96 / NCR

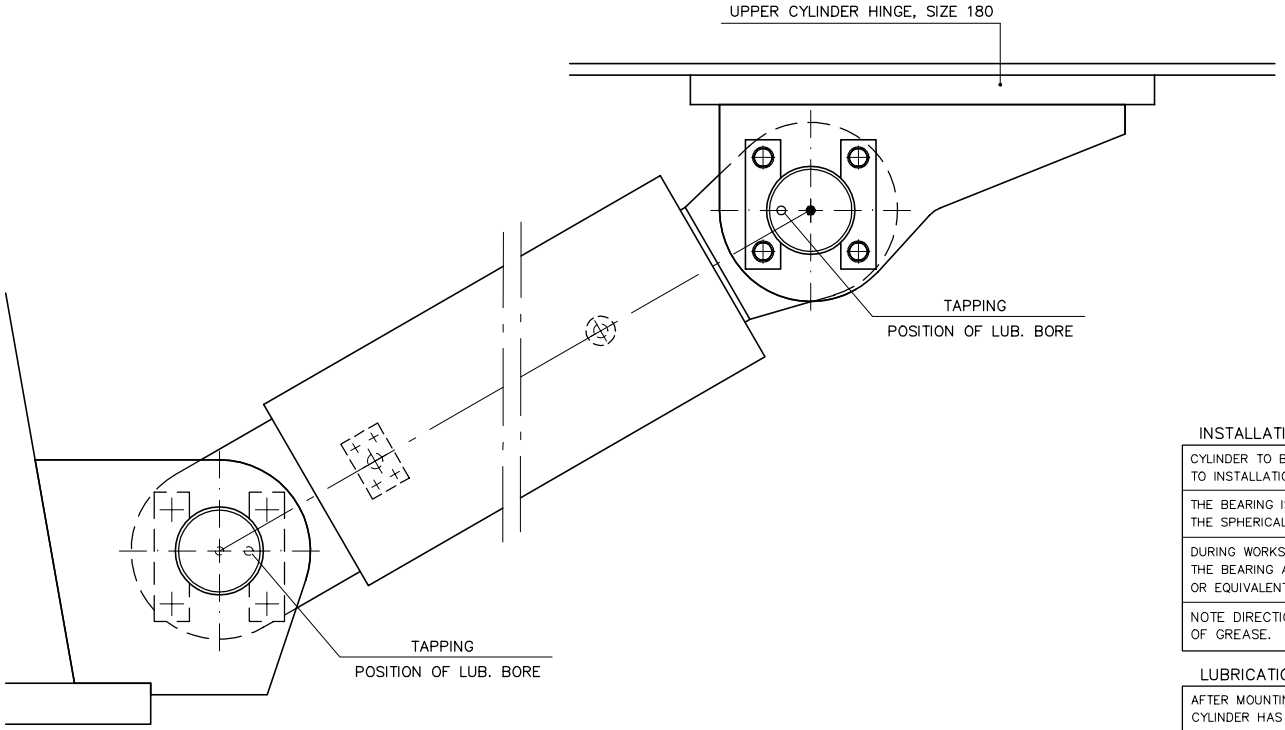

INSTALLATION

CYLINDER TO BE MOUNTED WITH LOAD CONTROL VALVE AND HYDR. PIPING PRIOR TO INSTALLATION.

THE BEARING IS DESIGNED FOR SLIDING DIRECTLY ON THE AXLE.
THE SPHERICAL SURFACE IS MAINLY FOR SELFALIGNMENT AND NOT FOR SLIDING.

DURING WORKSHOP PREPARATION THE SPHERICAL AND SLIDING SURFACES OF THE BEARING ARE TO BE TREATED WITH MOLYKOTE PASTE TYPE **Cu-7439 Plus** OR EQUIVALENT.

NOTE DIRECTION OF LUBRICATION BORE TO OBTAIN CORRECT DISTRIBUTION OF GREASE.

LUBRICATION

AFTER MOUNTING, AND AT EVERY FOLLOWING **50-100-....** HOURS OF OPERATION, CYLINDER HAS TO BE GREASED AT ALL GREASE NIPPLES USING GREASE TYPE EP2 OR EQUIVALENT.
REF. COMPARISON CHART **K-07-16.**

LUBRICATION CHANNEL

TAPPING IN BOLT END INDICATE POSITION OF LUB. BORE

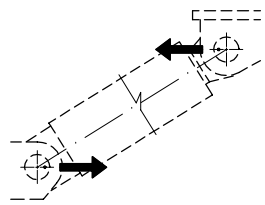

TOTAL WEIGHT APPROX [kg] ~ 3909

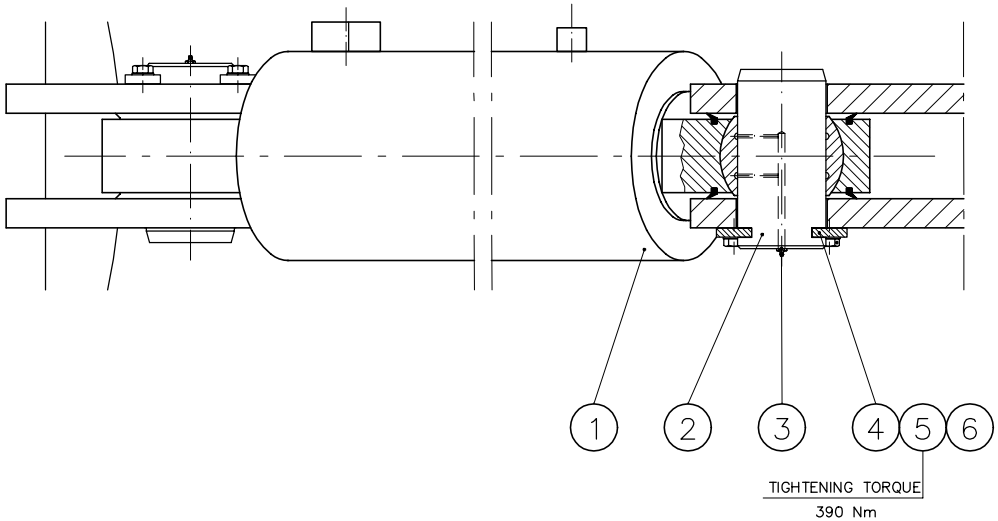

NOS	ITEM / DIMENSION		POS	MATR / DRWG / ART NO	WEIGHT
8	WASHER, DIN 125A	ø21	6	GALV	–
8	HEX SCREW, DIN 933	M20x45	5	8.8 GALV.	1
4	LOCK PLATE	SIZE 40	4	A4-1000	6
2	GREASE NIPPLE ARR.		3	A4-1075	–
2	BOLT	ø180	2	A4-1088	132
1	CYLINDER	Item 205	1	Hydr. Circuit	3770

THIS DRAWING IS THE PROPERTY OF **NORLIFT %** AND MUST NOT BE REPRODUCED WITHOUT OUR WRITTEN CONSENT

DRAWN BY AJ 02.04.96 | CHECKED BY 15.07.96 / NCR | APPR BY 15.07.96 / NCR

PROJECT
CRANE 800 tm GP
ø320/ø250 – LEFT HAND VER.

TS - Norlift AS
MARINE CARGO GEAR

DRWG NAME
CYLINDER HINGE ASSEMBLY

SCALE –

E

DRWG NO A3-1162 REV 1

MASTER DRWG | REPLACED BY | REPLACES

REV	ALTERATION	DATE / SIGN
1	RELEASED FOR PRODUCTION	15.07.96 / NCR

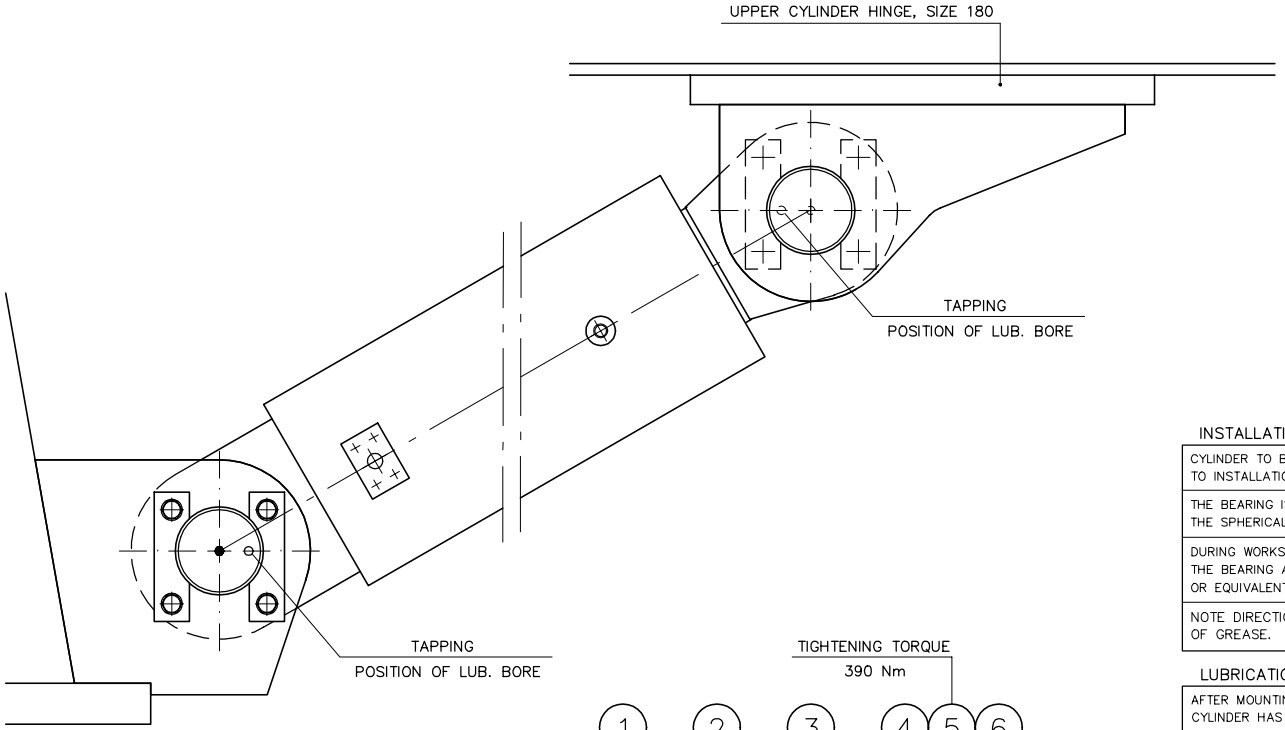

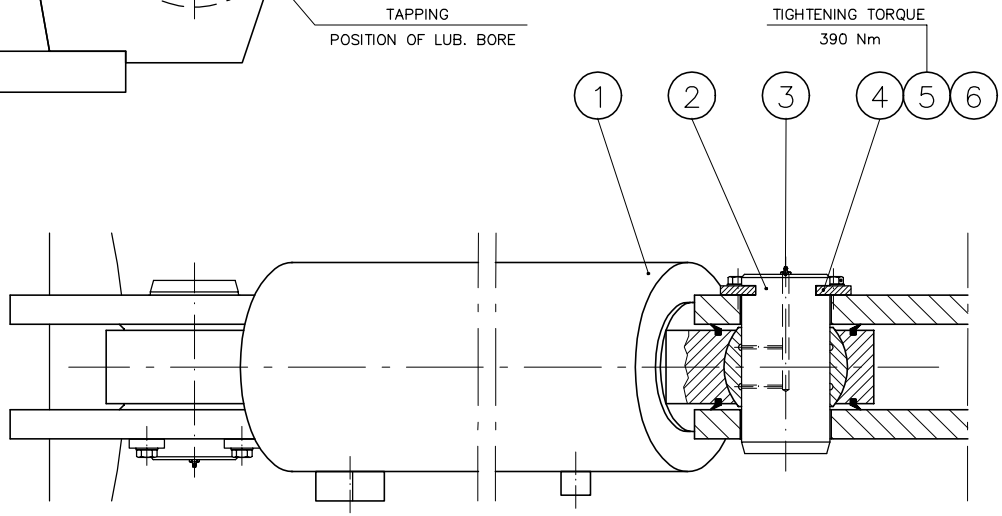

INSTALLATION

CYLINDER TO BE MOUNTED WITH LOAD CONTROL VALVE AND HYDR. PIPING PRIOR TO INSTALLATION.
THE BEARING IS DESIGNED FOR SLIDING DIRECTLY ON THE AXLE. THE SPHERICAL SURFACE IS MAINLY FOR SELFALIGNMENT AND NOT FOR SLIDING.
DURING WORKSHOP PREPARATION THE SPHERICAL AND SLIDING SURFACES OF THE BEARING ARE TO BE TREATED WITH MOLYKOTE PASTE TYPE **Cu–7439 Plus** OR EQUIVALENT.
NOTE DIRECTION OF LUBRICATION BORE TO OBTAIN CORRECT DISTRIBUTION OF GREASE.

LUBRICATION

AFTER MOUNTING, AND AT EVERY FOLLOWING **50–100–....** HOURS OF OPERATION, CYLINDER HAS TO BE GREASED AT ALL GREASE NIPPLES USING GREASE TYPE EP2 OR EQUIVALENT. REF. COMPARISON CHART **K–07–16.**

LUBRICATION CHANNEL

TAPPING IN BOLT END INDICATE POSITION OF LUB. BORE

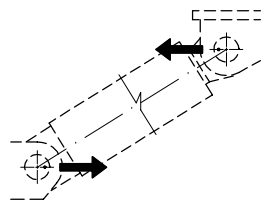

TOTAL WEIGHT APPROX [kg] ~ 3909

NOS	ITEM / DIMENSION		POS	MATR / DRWG / ART NO	WEIGHT
8	WASHER, DIN 125A	ø21	6	GALV	–
8	HEX SCREW, DIN 933	M20x45	5	8.8 GALV.	1
4	LOCK PLATE	SIZE 40	4	A4–1000	6
2	GREASE NIPPLE ARR.		3	A4–1075	–
2	BOLT	ø180	2	A4–1088	132
1	CYLINDER	Item 205	1	Hydr. Circuit	3770

THIS DRAWING IS THE PROPERTY OF **TTS NORLIFT** % AND MUST NOT BE REPRODUCED WITHOUT OUR WRITTEN CONSENT

DRAWN BY	CHECKED BY	APPR BY
AJ 02.04.96	15.07.96 / NCR	15.07.96 / NCR

PROJECT

CRANE 800 tm GP

ø320/ø250 – RIGHT HAND VER.

TTS - Norlift AS

MARINE CARGO GEAR

DRWG NAME

CYLINDER HINGE ASSEMBLY

SCALE –

E

DRWG NO A3–1163 REV 1

MASTER DRWG	REPLACED BY	REPLACES

REV	ALTERATION	DATE / SIGN
1	RELEASED FOR PRODUCTION	jhe–03.03.00

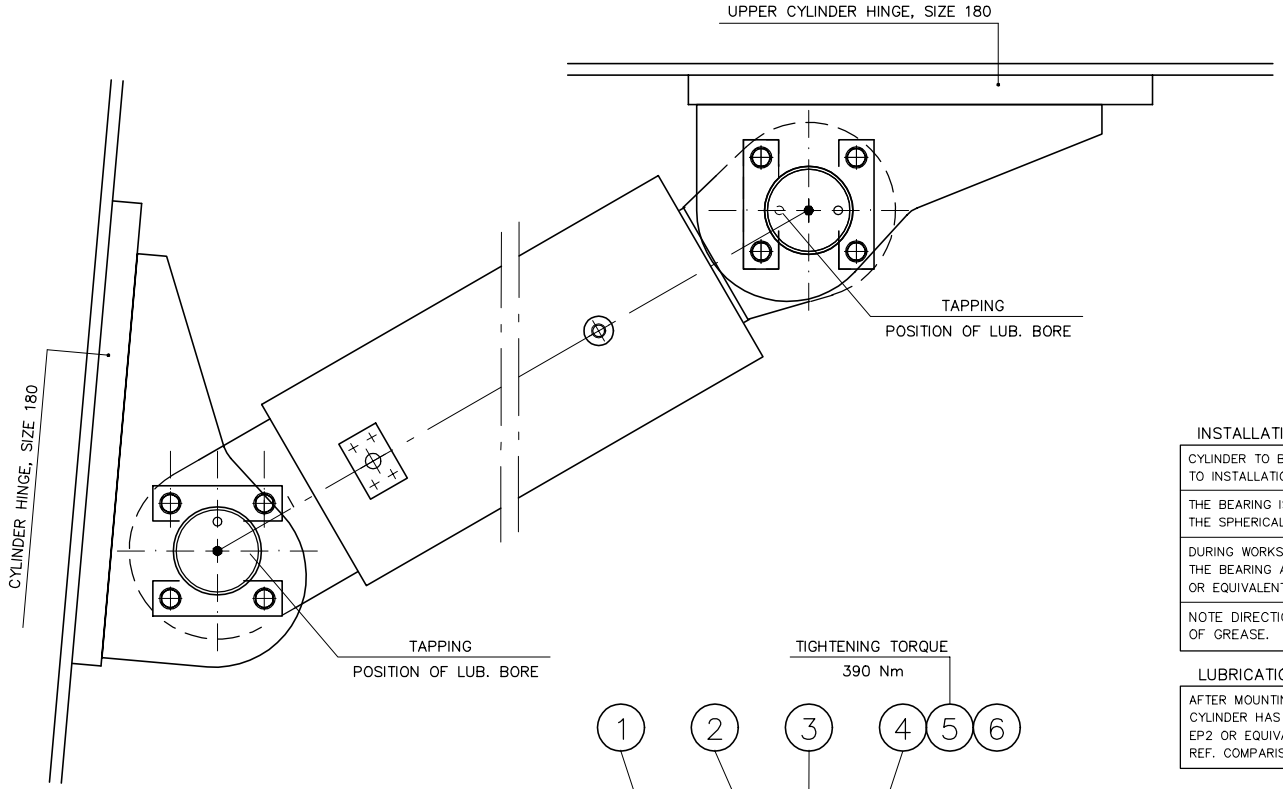

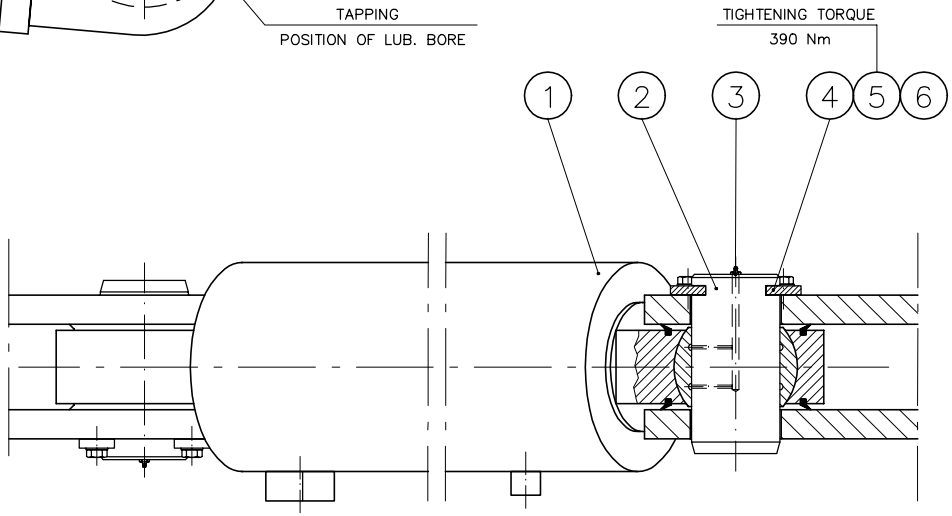

INSTALLATION

CYLINDER TO BE MOUNTED WITH LOAD CONTROL VALVE AND HYDR. PIPING PRIOR TO INSTALLATION.
THE BEARING IS DESIGNED FOR SLIDING DIRECTLY ON THE AXLE. THE SPHERICAL SURFACE IS MAINLY FOR SELFALIGNMENT AND NOT FOR SLIDING.
DURING WORKSHOP PREPARATION THE SPHERICAL AND SLIDING SURFACES OF THE BEARING ARE TO BE TREATED WITH MOLYKOTE PASTE TYPE **Cu–7439 Plus** OR EQUIVALENT.
NOTE DIRECTION OF LUBRICATION BORE TO OBTAIN CORRECT DISTRIBUTION OF GREASE.

LUBRICATION

AFTER MOUNTING, AND AT EVERY FOLLOWING **50–100–....** HOURS OF OPERATION, CYLINDER HAS TO BE GREASED AT ALL GREASE NIPPLES USING GREASE TYPE EP2 OR EQUIVALENT. REF. COMPARISON CHART **K–07–16.**

LUBRICATION CHANNEL

TAPPING IN BOLT END INDICATE POSITION OF LUB. BORE

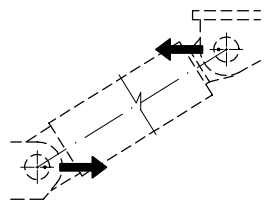

TOTAL WEIGHT APPROX [kg] ~ 4019

NOS	ITEM / DIMENSION		POS	MATR / DRWG / ART NO	WEIGHT
8	WASHER, DIN 125A	ø21	6	GALV	–
8	HEX SCREW, DIN 933	M20x45	5	8.8 GALV.	1
4	LOCK PLATE	SIZE 40	4	A4–1000	6
2	GREASE NIPPLE ARR.		3	A4–1075	–
2	BOLT	ø180	2	A4–1088	132
1	CYLINDER	Item 501	1	Hydr. circuit	3880

THIS DRAWING IS THE PROPERTY OF **NORLIFT %** AND MUST NOT BE REPRODUCED WITHOUT OUR WRITTEN CONSENT

DRAWN BY JHE 03.03.00 | CHECKED BY | APPR BY

PROJECT
CRANE 1899 – GPFO 2000
ø350/ø250 – RIGHT HAND VER.

TS - Norlift AS
MARINE CARGO GEAR

DRWG NAME
FOLDING CYLINDER HINGE ASSEMBLY

SCALE –

E

DRWG NO A3–9309 REV 1

MASTER DRWG | REPLACED BY | REPLACES

REV	ALTERATION	SIGN / DATE
1	RELEASED FOR PRODUCTION	FTU 03.02.01

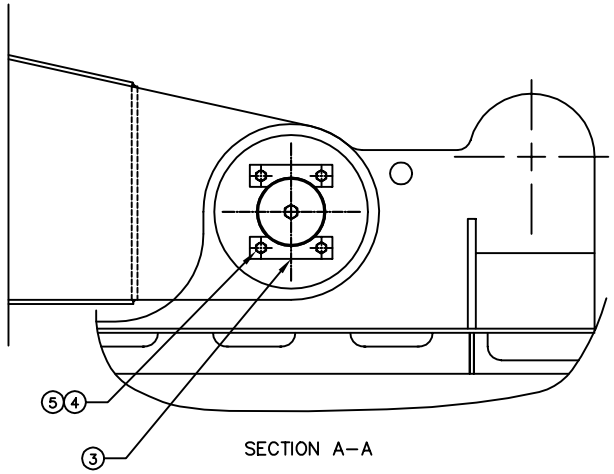

SECTION A–A

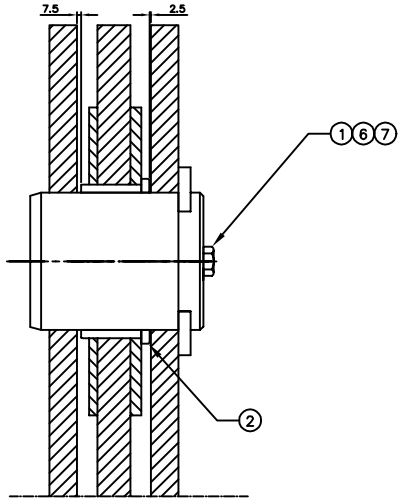

SECTION B–B

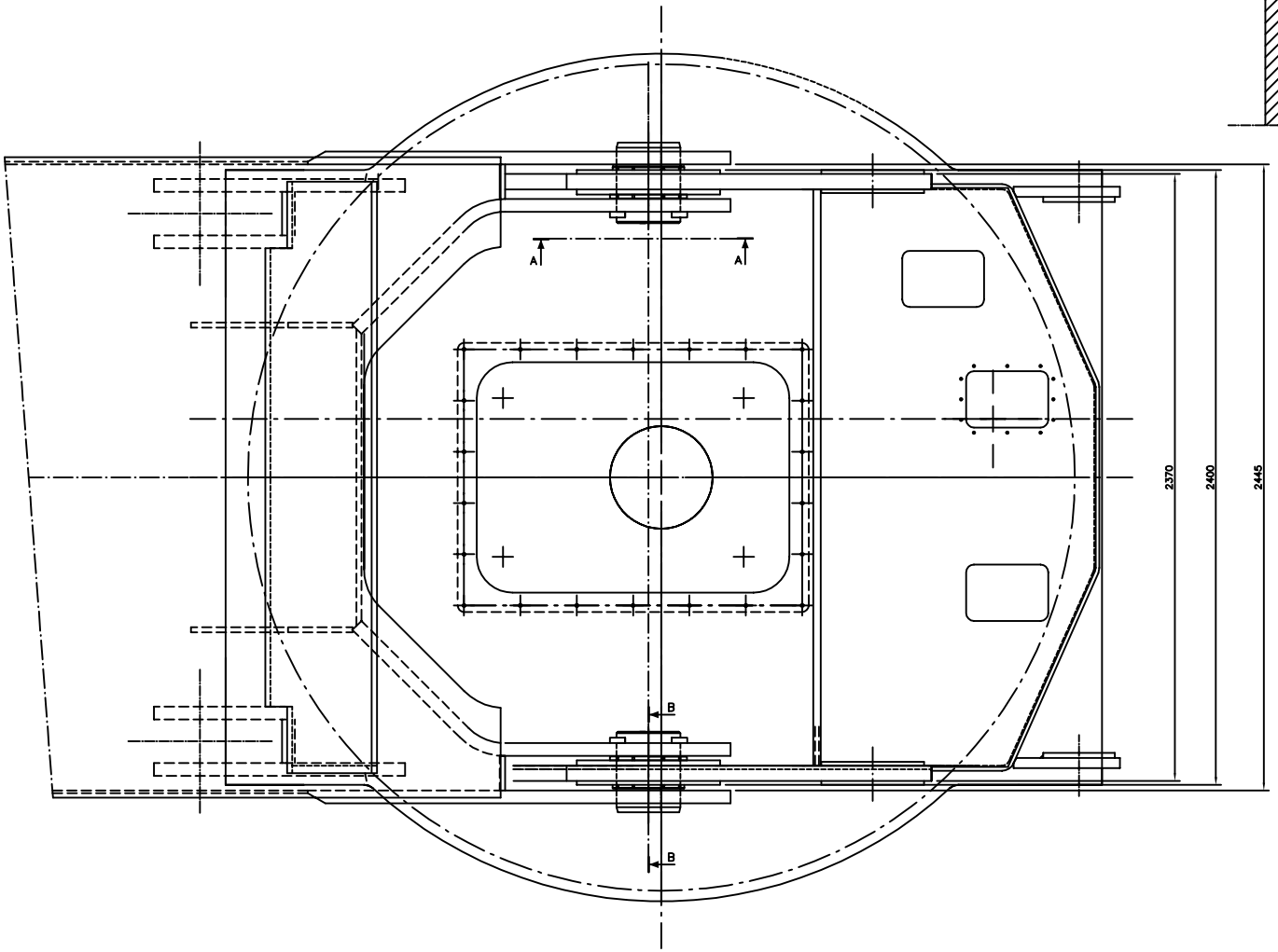

2	GREAS NIPPLE ARR.	7	A4–1075	–
2	PLUG M30	6	A4–1076	2
16	WASHER DIN 125 25	5	ELZN	–
8	HEX.HEAD SCREW M24x50	4	ELZN 8.8	–
4	LOCK PLATES	3	A4–1000–50	16
2	BEARING	2	A4–7090	26
2	BOLT	1	A4–7091	242

THIS DRAWING IS THE PROPERTY OF TTS–NORLIFT % AND MUST NOT BE REPRODUCED WITHOUT OUR WRITTEN CONSENT

DRAWN BY FTU 02.03.01 | CHECKED BY | APPR BY

PROJECT

TTS - Norlift AS
MARINE CARGO GEAR

DRWG NAME: JIB HINGE ASSEMBLY
SLEWING COLUMN AND INNER JIB

SCALE 1:10 | E

DRWG NO A1–10021 REV 1

REPLACES | REPLACED BY | MASTER DRWG

REV	ALTERATION	SIGN / DATE
1	RELEASED FOR PRODUCTION	JHE–29.02.00

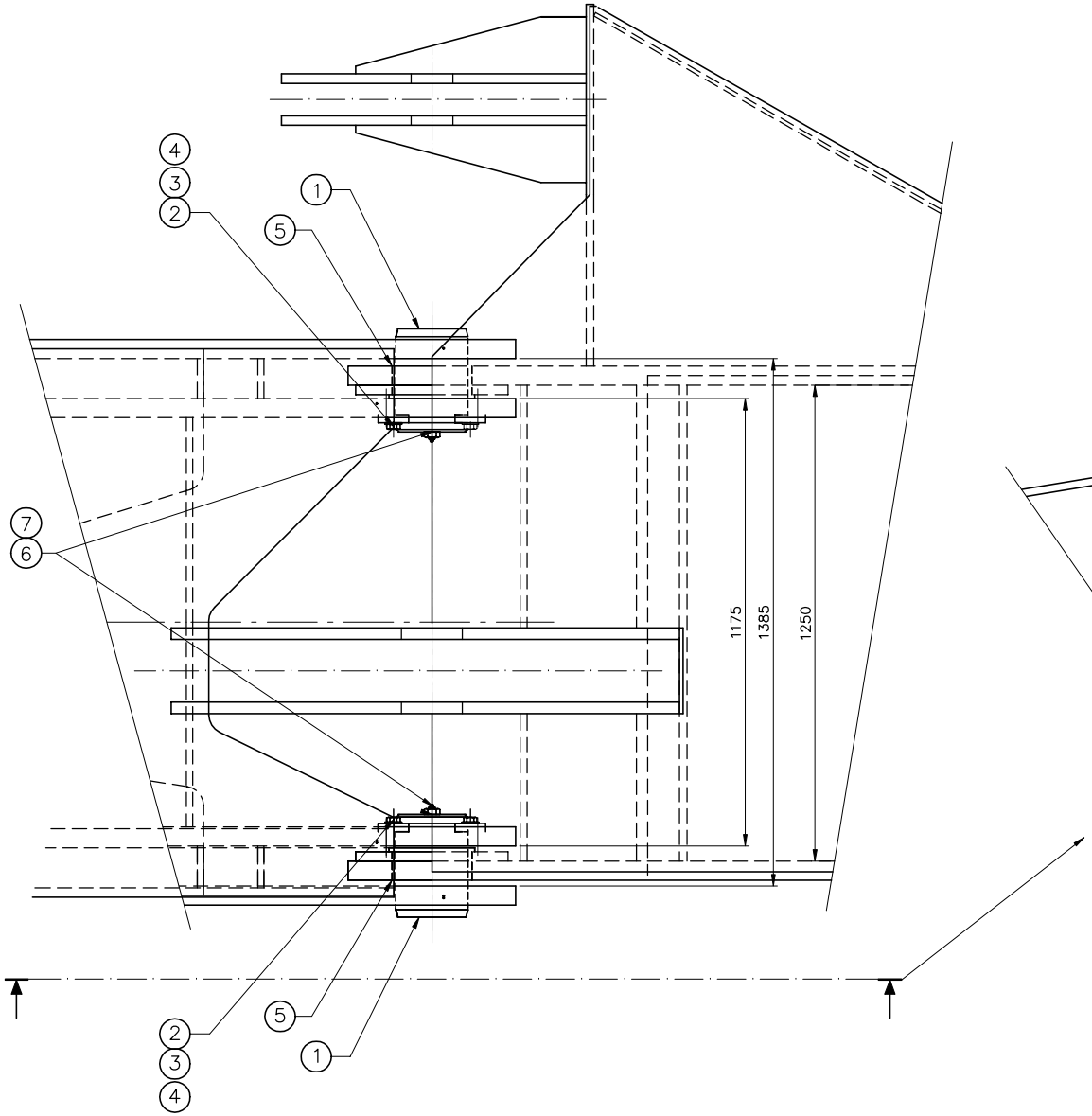

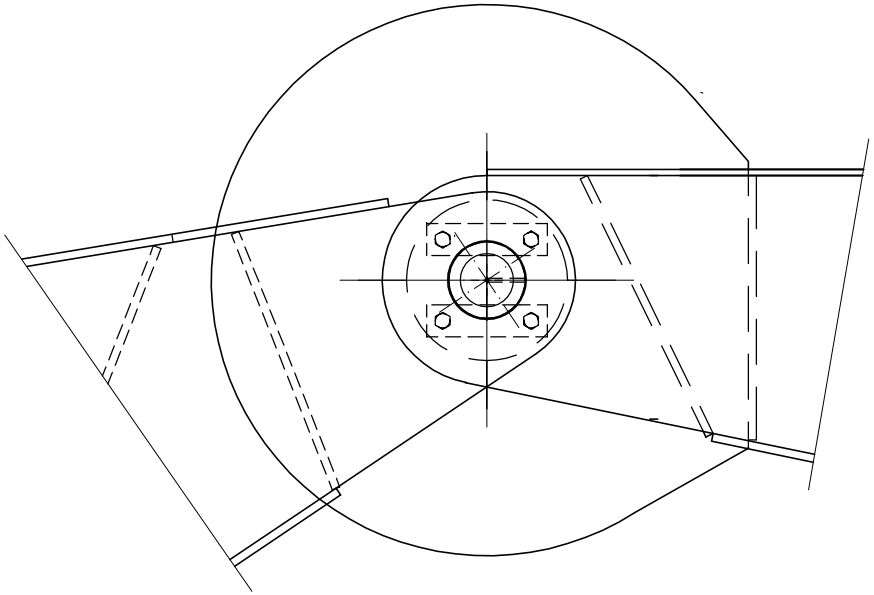

LUBRICATION NOTE

JIB HINGE BOLT TO BE GREASED BEFORE MOUNTING.
GREASE TO CONTAIN MOLYBDENDISULPHIDE MoS
REF. OIL AND LUBRICATION CHART.

TOTAL WEIGHT [Kg] ~150

NOS	ITEM / DIMENSION		POS	MATR / DRWG / ART NO	WEIGHT
2	EH PLUG	POS	7	A4–1076	–
2	GREASE NIPPLE		6	A4–1075	
2	JIB BEARING	ø190/ø210x95	5	A4–1087	9
8	HEX SCREW DIN933	M24x55	4	8.8. ELZN	–
8	WASHER DIN 125A	ø44/ø25x4	3	ELZN	–
4	LOCKING PLATE	SIZE 50	2	A4–1000–50	15
2	JIB HINGE BOLT	ø190x270	1	A3–1269	120

THIS DRAWING IS THE PROPERTY OF NORLIFT % AND MUST NOT BE REPRODUCED WITHOUT OUR WRITTEN CONSENT

DRAWN BY JHE 29.02.00 | CHECKED BY | APPR BY

PROJECT: CRANE 1899

TTS - Norlift AS
MARINE CARGO GEAR

DRWG NAME: JIB HINGE BETWEEN JIBS ARRANGEMENT

SCALE: 1:10 | E

DRWG NO: A2–7709 REV 1

MASTER DRWG | REPLACED BY | REPLACES

REV	ALTERATION	DATE / SIGN
1	RELEASED FOR PRODUCTION	FTU 23.03.01

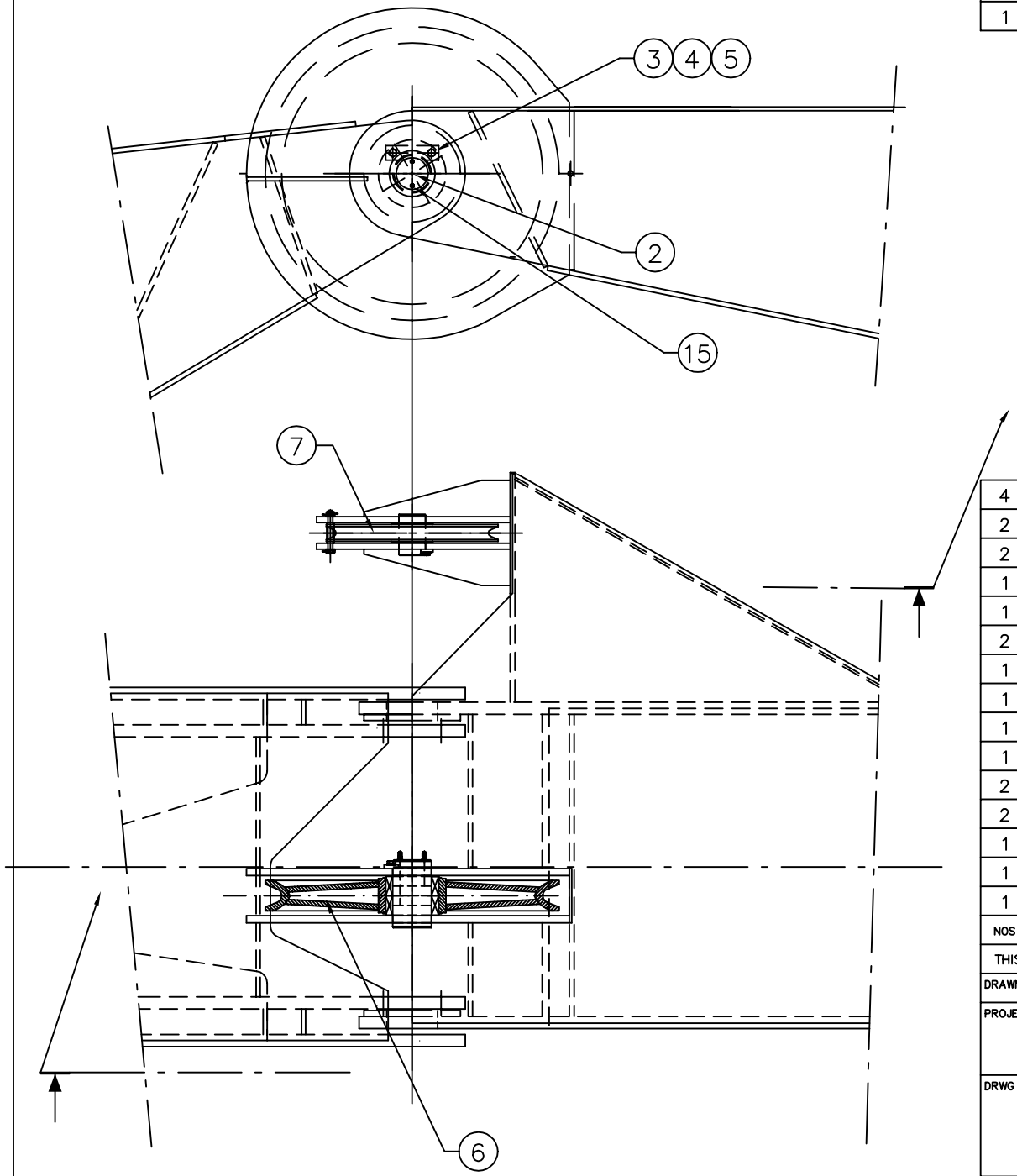

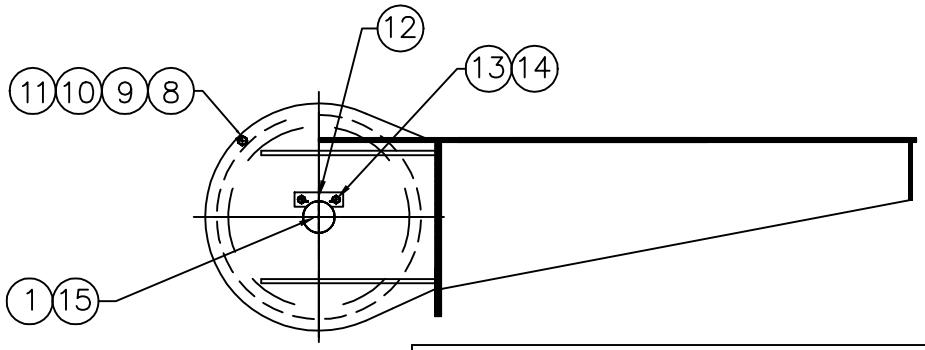

WIRE SHEAVE BEARING TO BE FILLED WITH GREASE (EP2) IMMEDIATELY AFTER ASSEMBLY.

WEIGHT OF EQUIPMENT [kg] ~ 535

NOS	ITEM / DIMENSION		POS	MATR / DRWG / ART NO	WEIGHT
4	GREASE NIPPLE ARR.		15	A4–1075	–
2	WASHER DIN 125A	Ø 17	14	GALV	–
2	SCREW DIN 933	M16x30	13	8.8 GALV	–
1	LOCK PLATE		12	A4–1000	1
1	SPACER	ø50/ø25 L–164	11	A4–7149	2
2	WASHER DIN 125A	ø21	10	GALV.	–
1	LOCKING NUT DIN 985	M20	9	8.8 GALV.	–
1	HEX HEAD SCREW	M20 x 170	8	8.8 GALV.	–
1	WIRE SHEAVE		6	A3–1059–4	74
1	WIRE SHEAVE		6	A3–7667	400
2	WASHER DIN 125A	Ø 21	5	GALV	–
2	SCREW DIN 933	M20x45	4	8.8 GALV	–
1	LOCK PLATE		3	A4–1000–40	1
1	BOLT		2	A4–7123	44
1	BOLT		1	A4–6391	13

THIS DRAWING IS THE PROPERTY OF TTS–NORLIFT % AND MUST NOT BE REPRODUCED WITHOUT OUR WRITTEN CONSENT

DRAWN BY FTU 23.03.01 | CHECKED BY | APPR BY

PROJECT

TTS - Norlift AS
MARINE CARGO GEAR

DRWG NAME
ARRANGEMENT
WIRESHEAVES BETWEEN JIBS

SCALE 1:20 E

DRWG NO A3–10212 REV 1

MASTER DRWG | REPLACED BY | REPLACES

REV	ALTERATION	SIGN / DATE
1	RELEASED FOR PRODUCTION	FTU 23.03.01

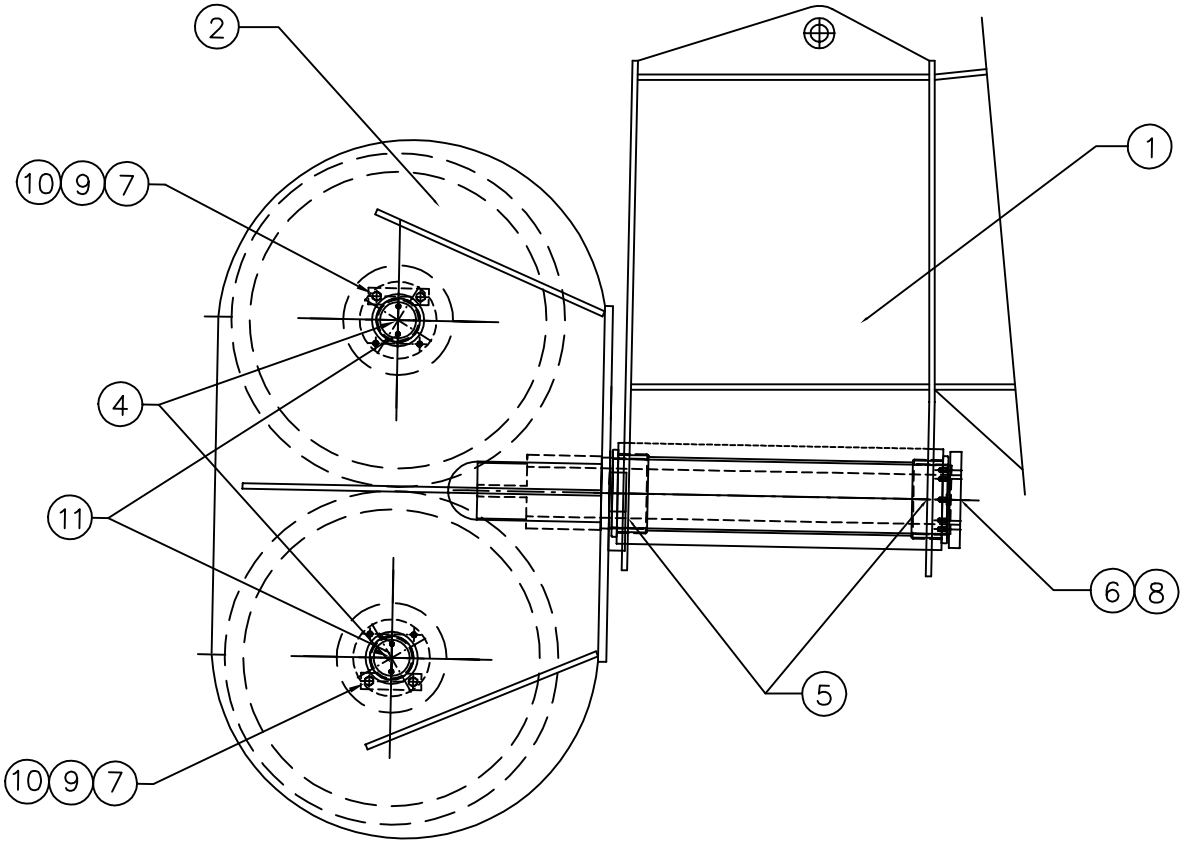

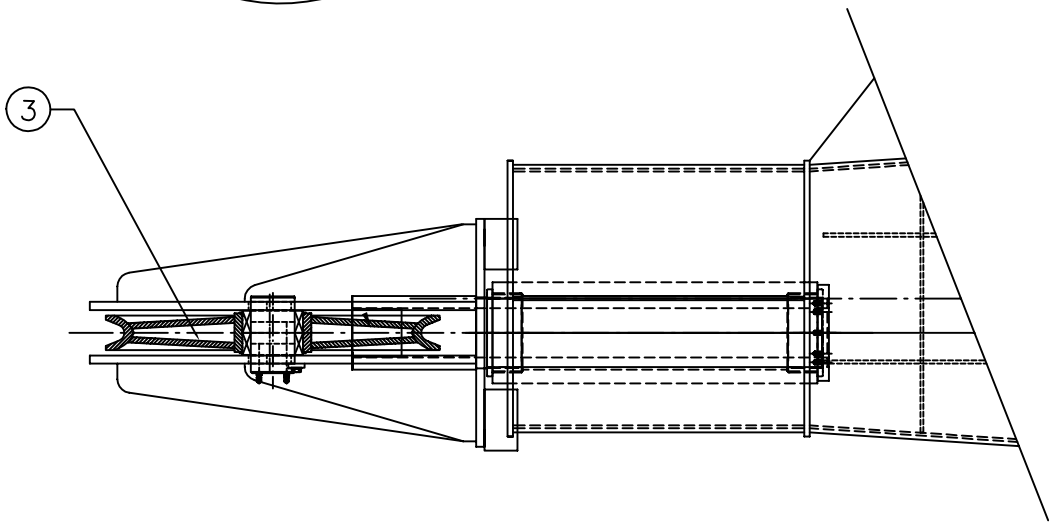

WEIGHT W/OUT STEEL STRUKTURE(Kg) ~943

TOT.WEIGHT(Kg) ~2485

2	GREASE NIPPLE	1/4"BSP	11		–
12	WASHER DIN 125 A	ø17	10	GALV	
4	HEX HEAD SCREW	M16x35	9	8.8 GALV	1
8	HEX HEAD SCREW	M16x70	8	8.8–GALV	
2	LOCK PLATE	12x50x170	7	A4–1000–30	2
1	BUFFERPLAT ø345x40	POS 7	6	A1–9788	26
2	JIB HEAD BEARING	ø280/250	5	A4–9272	26
2	BOLT FOR WIRE SHEAVE	ø160x280	4	A4–7123	88
2	WIRE SHEAVE		3	A3–7667	800
1	JIB HEAD STEEL ASSEMBLY	SWL 50T	2	A1–9788	2262
1	OUTER JIB		1	A1–10008	–
NOS	ITEM / DIMENSION		POS	MATR / DRWG / ART NO	WEIGHT
NOS	ITEM / DIMENSION		POS	MATR / DRWG / ART NO	WEIGHT

THIS DRAWING IS THE PROPERTY OF TTS–NORLIFT % AND MUST NOT BE REPRODUCED WITHOUT OUR WRITTEN CONSENT

DRAWN BY FTU 23.03.01 | CHECKED BY | APPR BY

PROJECT

TTS - Norlift AS
MARINE CARGO GEAR

DRWG NAME
JIB HEAD ASSEMBLY
SWL 50T

SCALE 1:10 | E

DRWG NO A1–10076 REV – 1

MASTER DRWG | REPLACED BY | REPLACES

REV	ALTERATION	DATE / SIGN
1	RELEASED FOR PRODUCTION	FTU 23.03.01

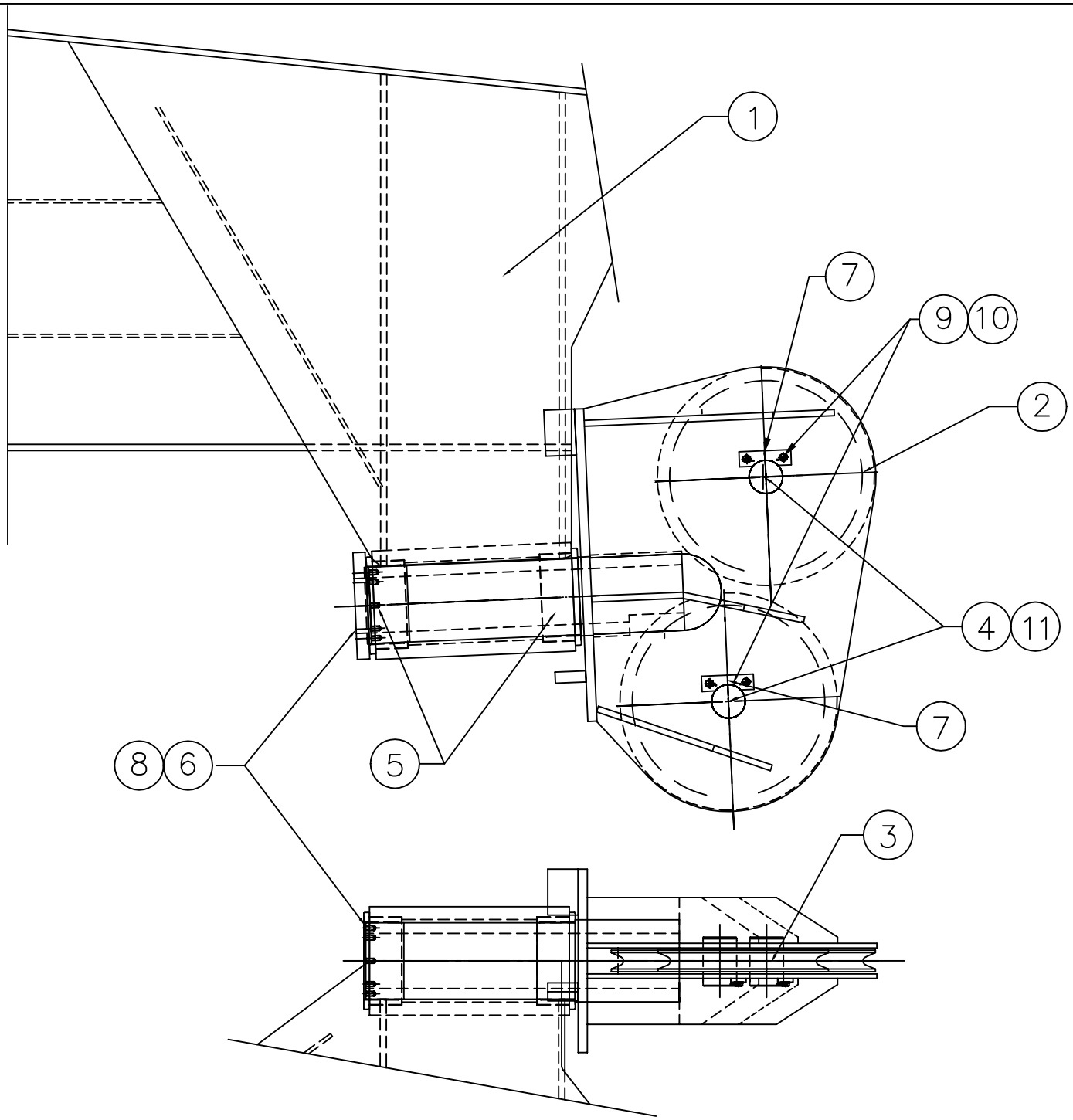

WEIGHT(Kg) ~925

NOS	ITEM / DIMENSION		POS	MATR / DRWG / ART NO	WEIGHT
2	GREAS NIPPLE	1/4"BSP	11		–
12	WASHER DIN 125 A	ø17	10	GALV	
4	HEX HEAD SCREW	M16x35	9	8.8 GALV	1
8	HEX HEAD SCREW	M16x70	8	8.8–GALV	
2	LOCK PLATE	12x50x170	7	A4–1000–30	2
1	BUFFERPLAT ø345x40	POS 8	6	A2–8119	–
2	JIB HEAD BEARING	ø280/250	5	A4–9272	26
2	BOLT FOR WIRE SHEAVE	ø110x175	4	A4–6391	26
2	WIRE SHEAVE		3	A3–1059–4	148
1	JIB HEAD STEEL ASSEMBLY		2	A2–8119	915
1	OUTER JIB		1	A1–10008	–

THIS DRAWING IS THE PROPERTY OF TTS–NORLIFT % AND MUST NOT BE REPRODUCED WITHOUT OUR WRITTEN CONSENT

DRAWN BY FTU 23.03.01 | CHECKED BY | APPR BY

PROJECT

TTS - Norlift AS
MARINE CARGO GEAR

DRWG NAME
JIB HEAD ASSEMBLY
SWL 10T

SCALE 1:10 E

DRWG NO A2–8260 REV 1

REPLACES | REPLACED BY | MASTER DRWG

REV	ALTERATION	SIGN / DATE
1	RELEASED FOR PRODUCTION	FTU 23.03.01

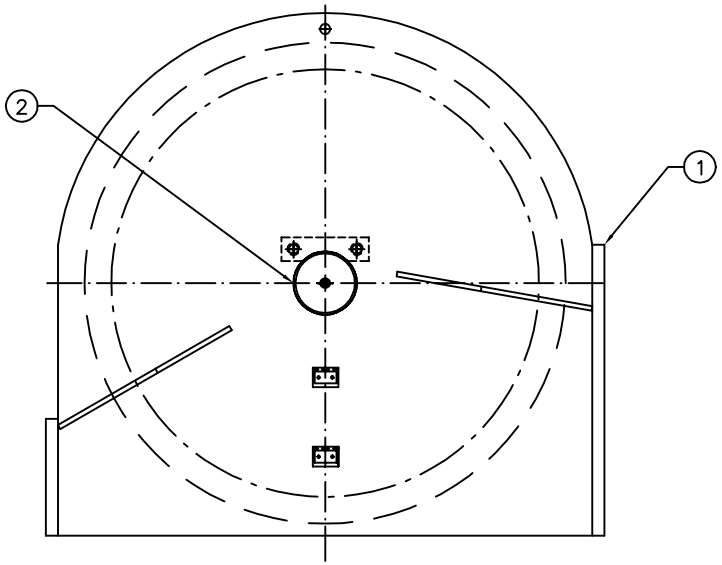

WIRE SHEAVE BEARING TO BE FILLED WITH GREASE (EP2) IMMEDIATELY AFTER ASSEMBLY.

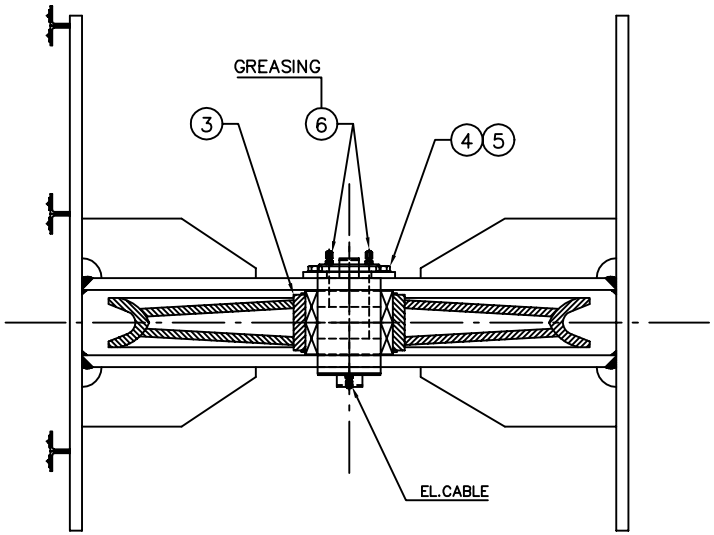

TOTAL WEIGHT [kg] ~1544

2	GREASE NIPPLER	1/4" BSP	6	A4–1075	–
2	WASHER DIN 125	ø21	5	ELZN	–
2	HEX.HEAD SCREW DIN 933	M20x45	4	8.8 ELZN	–
1	WIRE SHEAVE		3	A3–7667	400
1	SHEAVE BOLT W/LOAD CELL		2	A4–9425	44
1	JIB HEAD ON JIB		1	A1–9884	1100

THIS DRAWING IS THE PROPERTY OF TTS–NORLIFT % AND MUST NOT BE REPRODUCED WITHOUT OUR WRITTEN CONSENT

DRAWN BY FTU 23.03.01 | CHECKED BY | APPR BY

PROJECT

TTS - Norlift AS
MARINE CARGO GEAR

DRWG NAME: JIB HEAD ON JIB ASSEMBLY

SCALE 1:10 | E

DRWG NO A2–8263 REV 1

REPLACES | REPLACED BY | MASTER DRWG

REV	ALTERATION	DATE / SIGN
1	RELEASED FOR PRODUCTION	RR 22.02.98

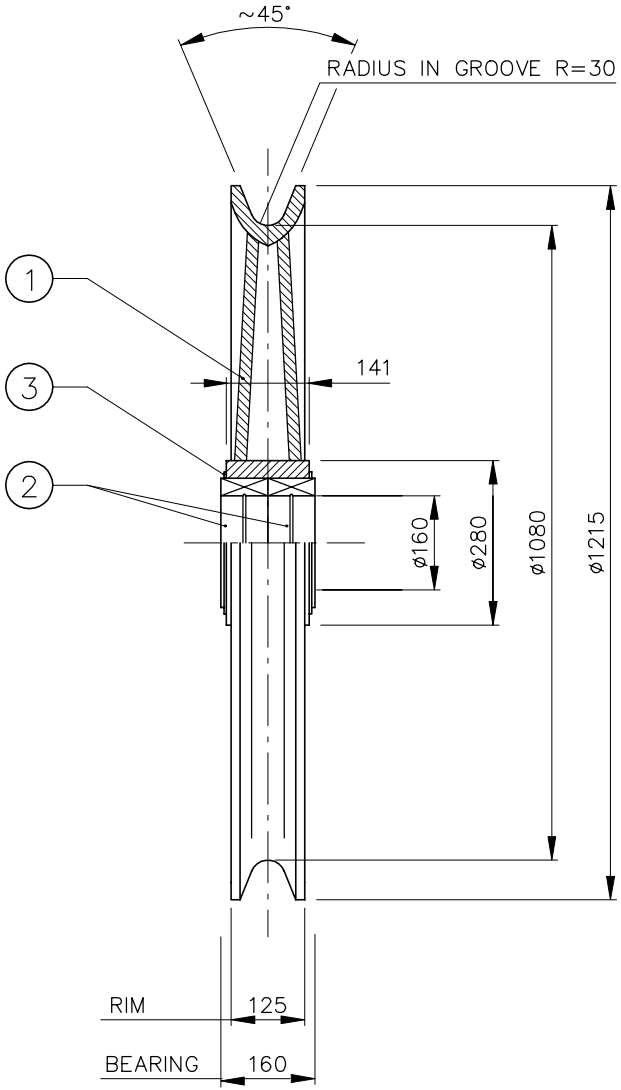

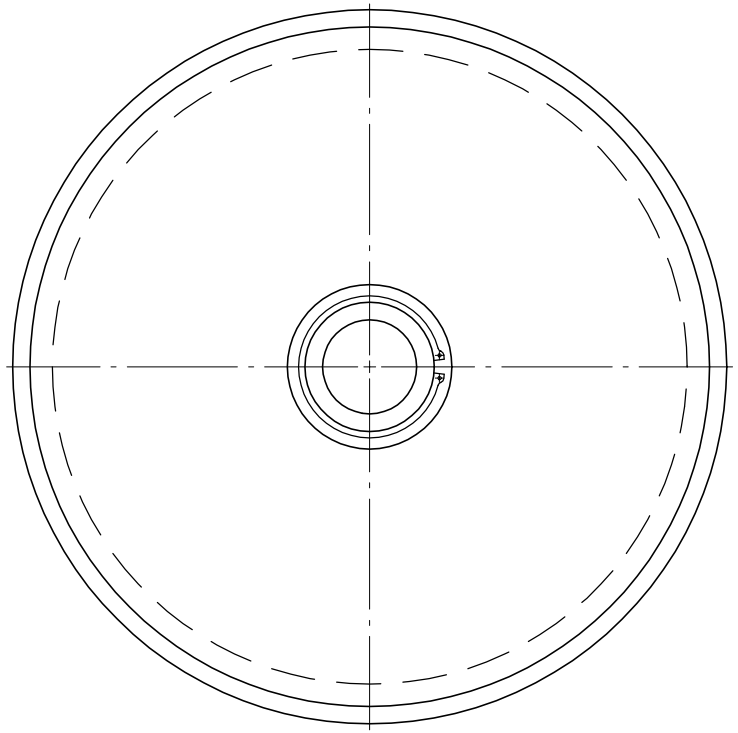

TOTAL WEIGHT [KG] : ~ 400

NOS	ITEM / DIMENSION	POS	MATR / DRWG / ART NO	WEIGHT
2	CIRCLIP DIN 471	3		
2	ROLLER BEARING	2	ACC. PURCHASE SPEC.	
1	WIRE SHEAVE	1	ACC. PURCHASE SPEC.	

THIS DRAWING IS THE PROPERTY OF TTS-NORLIFT % AND MUST NOT BE REPRODUCED WITHOUT OUR WRITTEN CONSENT

DRAWN BY RR 22.02.98 | CHECKED BY | APPR BY

PROJECT

TTS - Norlift AS
MARINE CARGO GEAR

DRWG NAME: WIRE SHEAVE

SCALE 1:10 E

DRWG NO A3-7667 REV 1

MASTER DRWG | REPLACED BY | REPLACES

REV	ALTERATION	DATE / SIGN
1	RELEASED FOR PRODUCTION	11.10.94 / RR
2	GENERAL UPDATING	10.01.97 / NCR
3	GENERAL UPDATING	04.12.97 / NCR
4	GROOVE ANGLE WAS 45°	26.01.99 / NCR

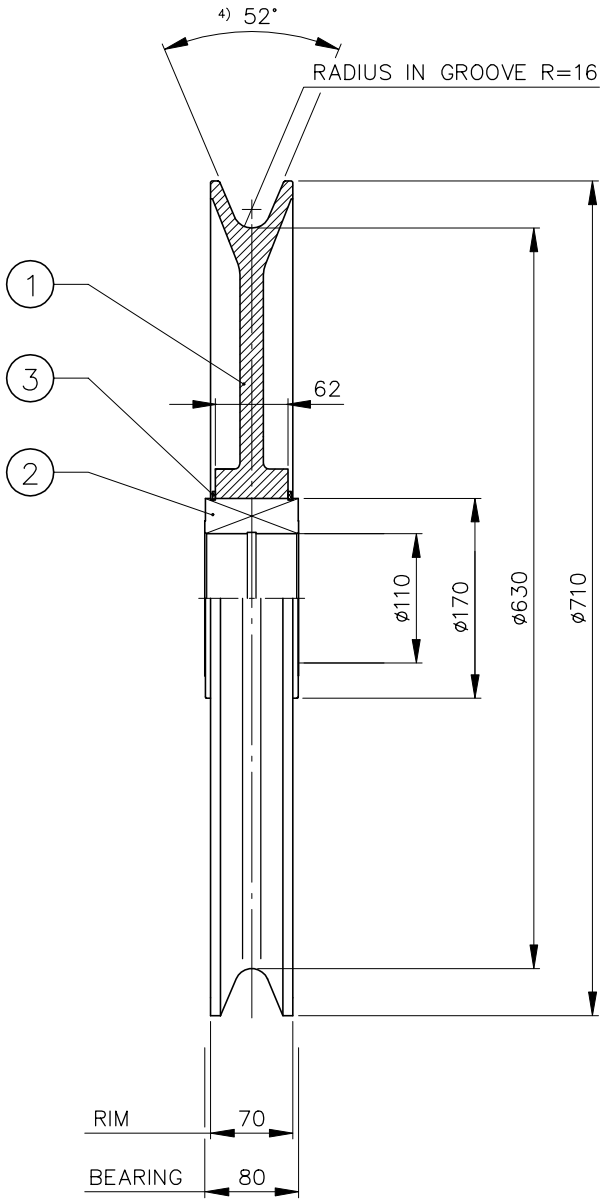

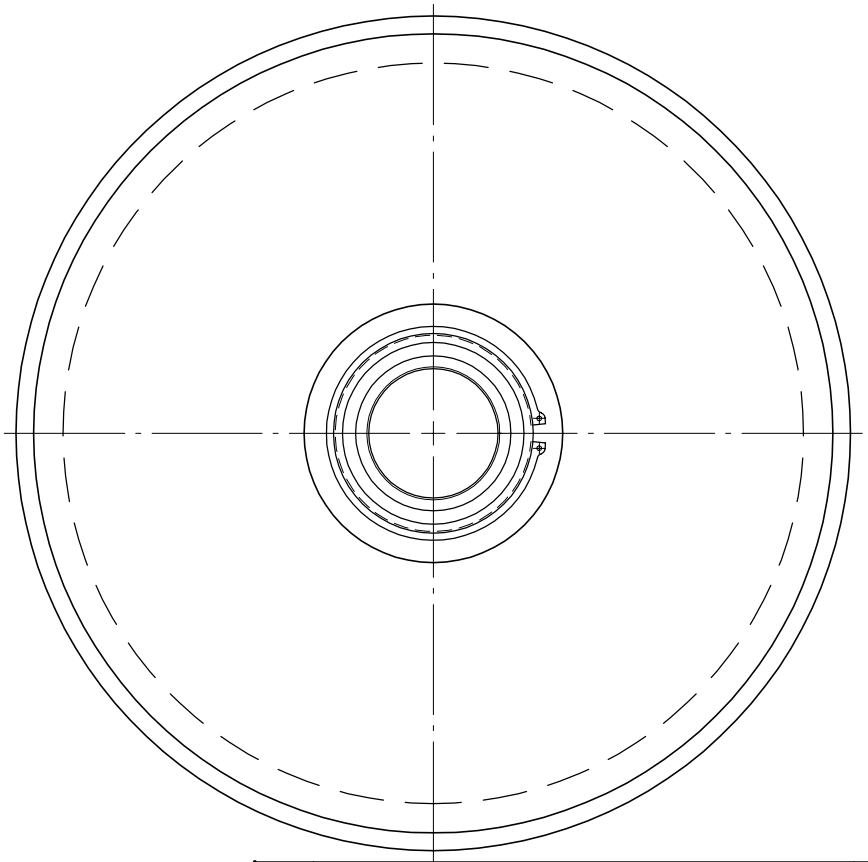

TOTAL WEIGHT [KG] : ~ 74

NOS	ITEM / DIMENSION	POS	MATR / DRWG / ART NO	WEIGHT
2	CIRCLIP DIN 471	3		
1	ROLLER BEARING	2	ACC. PURCHASE SPEC.	
1	WIRE SHEAVE	1	ACC. PURCHASE SPEC.	

THIS DRAWING IS THE PROPERTY OF TTS-NORLIFT % AND MUST NOT BE REPRODUCED WITHOUT OUR WRITTEN CONSENT

DRAWN BY RR 11/10/94 | CHECKED BY 18.02.96 / NCR | APPR BY 18.02.96 / NCR

PROJECT

TTS - Norlift AS
MARINE CARGO GEAR

DRWG NAME: WIRE SHEAVE

SCALE 1:5 E

DRWG NO A3-1059 REV 4

MASTER DRWG | REPLACED BY | REPLACES

0 100 200 300 400 500 mm

REV	ALTERATION	SIGN / DATE
1	RELEASED FOR PRODUCTION	FTU 28.03.00

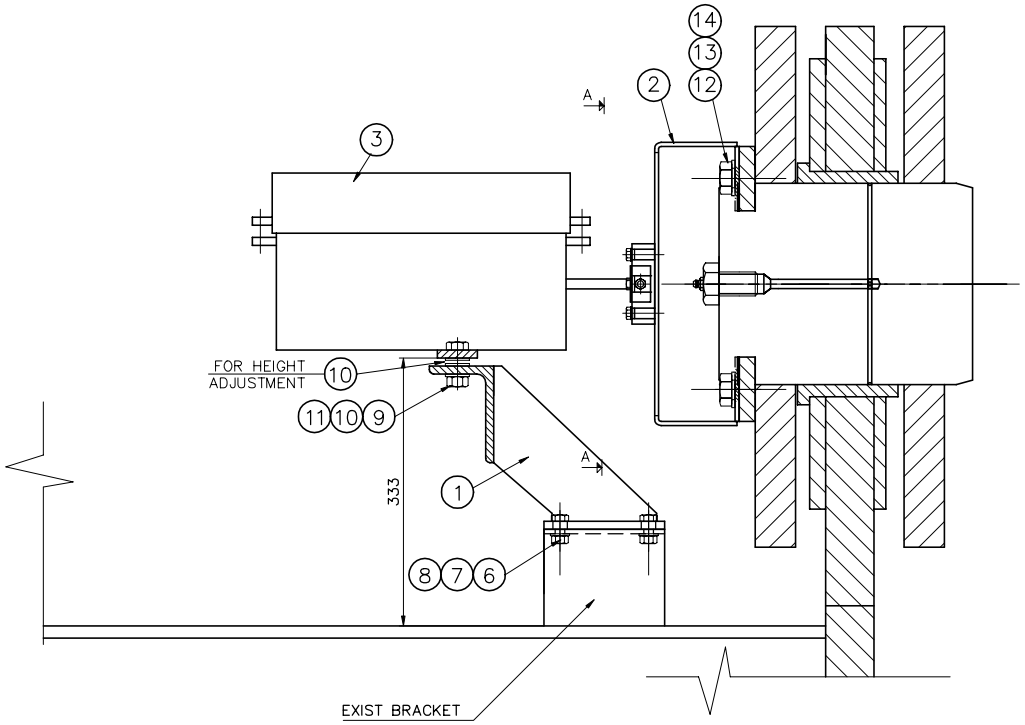

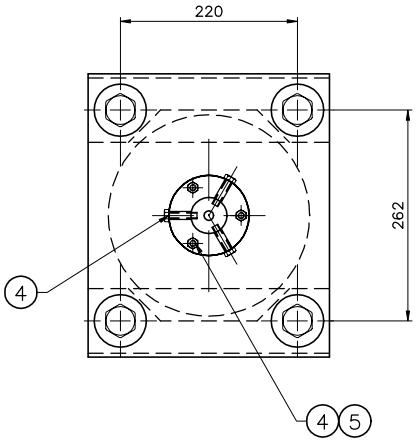

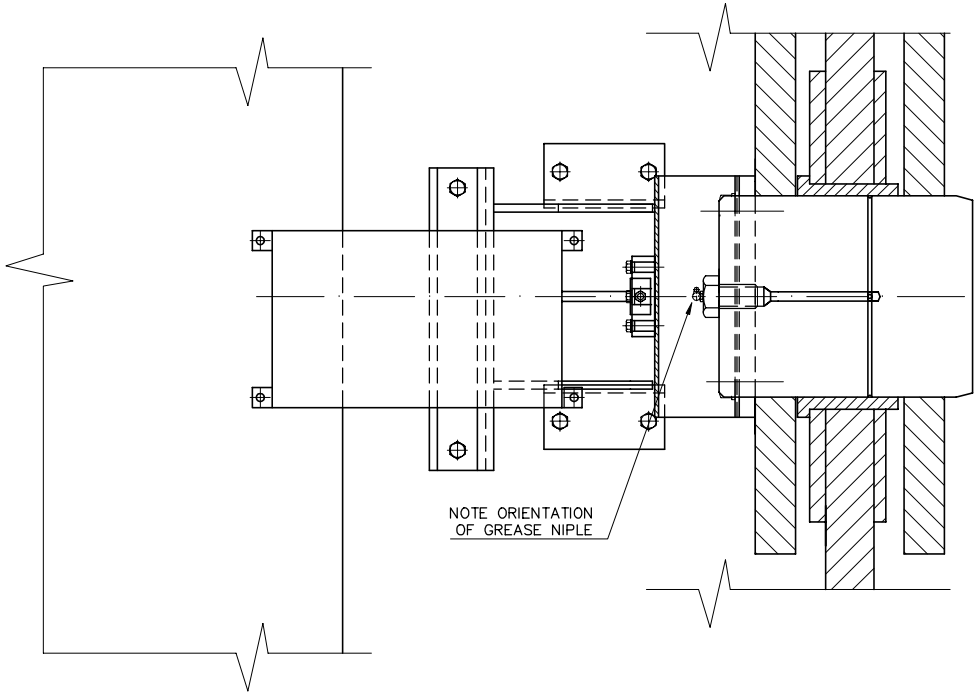

TOTAL WEIGHT APPROX. [KG] ~24

NOS	ITEM / DIMENSION		POS	MATR / DRWG / ART NO	WEIGHT
1	GREASE NIPLE AKR1/4" 90°		15	ELZN	–
4	NUT DIN934	REF.	14		–
4	WASHER	REF.	13		–
4	HEX. HEAD SCREW	REF.	12		–
2	NUT DIN934	M16	11	8 GALV.	–
16	WASHER DIN125	M16	10	GALV.	–
2	HEX. HEAD SCREW DIN933	M16x60	9	8.8 GALV.	–
4	NUT DIN934	M12	8	8 GALV.	–
6	WASHER DIN125	M12	7	GALV.	–
4	HEX. HEAD SCREW DIN933	M12x35	6	8.8 GALV.	–
6	WASHER DIN125	M8	5	GALV.	–
6	HEX. HEAD SCREW DIN933	M8x35	4	8.8 GALV.	–
1	LIMIT SWITCH BOX	–S42	3	A4–8536	6
1	ADAPTER FOR LIMIT SWITCH		2	A3–7644	8
1	BRACKET FOR LIMIT SWITCH		1	A3–7643	10

THIS DRAWING IS THE PROPERTY OF **NORLIFT %** AND MUST NOT BE REPRODUCED WITHOUT OUR WRITTEN CONSENT

DRAWN BY FTU 28.03.00 | CHECKED BY | APPR BY

PROJECT: JIB LIMIT SWITCH

TTS - Norlift AS
MARINE CARGO GEAR

DRWG NAME: ARRANGEMENT

SCALE: 1:5 | E

DRWG NO: A2–7738 REV 1

MASTER DRWG | REPLACED BY | REPLACES

REV	ALTERATION	SIGN / DATE
1	RELEASED FOR PRODUCTION	FTU 27.03.01

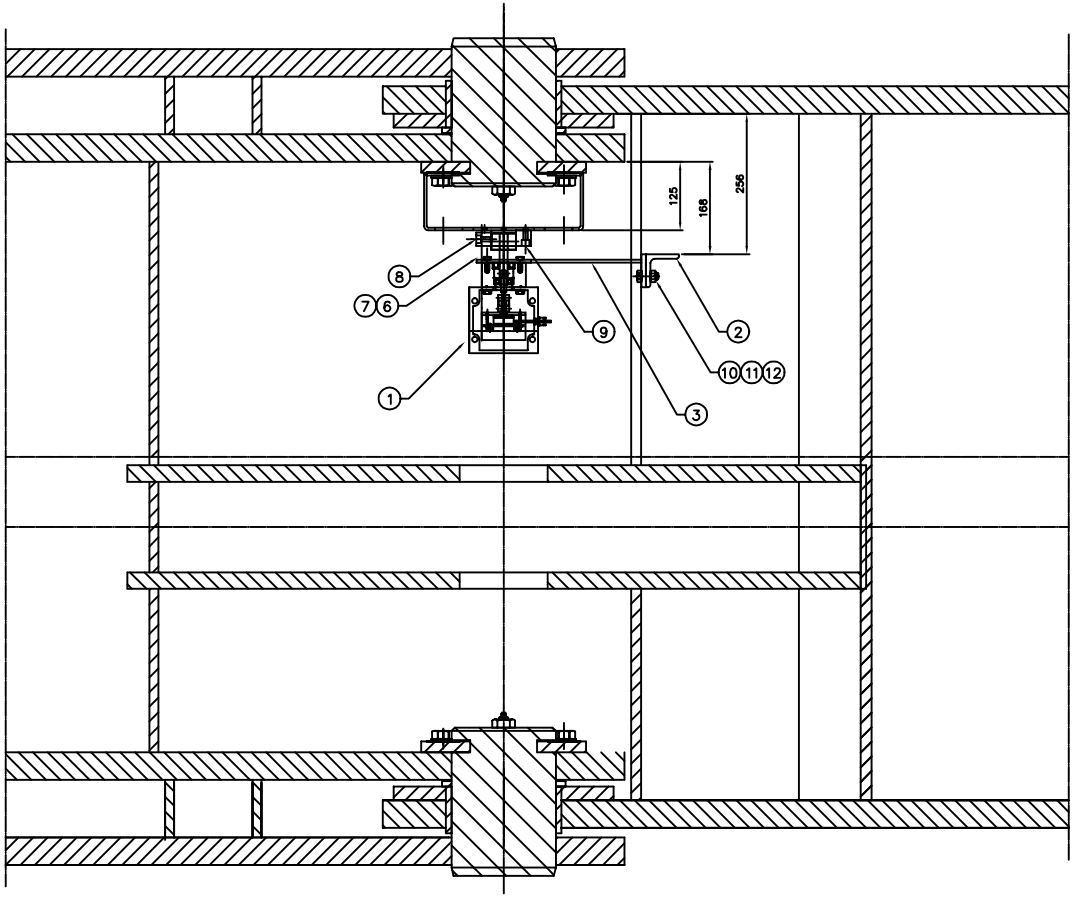

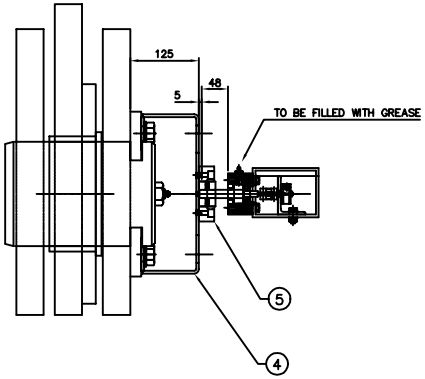

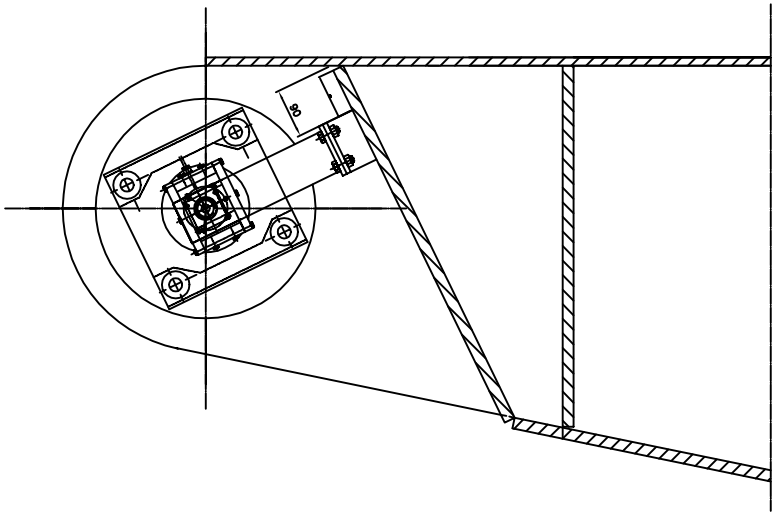

NOS	ITEM / DIMENSION	POS	MARK / DRWG / ART NO	WEIGHT
4	WASHER DIN 125A ø12	12	ELZN	–
2	LOCK NUT M12	11	8.8 ELZN	–
2	HEX BOLT DIN 933 M12x40	10	8.8 ELZN	–
3	CYL HEAD SCREW DIN 912 M8x30	9	ELZN	–
3	CYL HEAD SCREW DIN 912 M8x20	8	ELZN	–
4	WASHER DIN 125 M8	7	ELZN	–
4	HEX BOLT DIN 933 M8x20	6	8.8 ELZN	–
1	COUPLING	5		–
1	ADAPTER	4	A3–9381	6
1	BRACKET FOR ANGLE MEASURE ARR. POS 1,2	3	A4–8598	2
1	BRACKET FOR ANGLE MEASURE ARR. POS 3	2	A4–8598	1
1	ANGLE MEASURE BOX COMP. UNIT	1	A3–10258	5

THIS DRAWING IS THE PROPERTY OF TTS–NORLIFT % AND MUST NOT BE REPRODUCED WITHOUT OUR WRITTEN CONSENT

DRAWN BY FTU 27.03.01 | CHECKED BY | APPR BY

PROJECT

TTS - Norlift AS
MARINE CARGO GEAR

DRWG NAME: ANGLE MEASURE ARRANGEMENT

SCALE 1:5 | E

DRWG NO A1–10085 REV 1

REPLACES | REPLACED BY | MASTER DRWG

REV	ALTERATION	DATE / SIGN
1	RELEASED FOR PRODUCTION	22.03.01/EOL

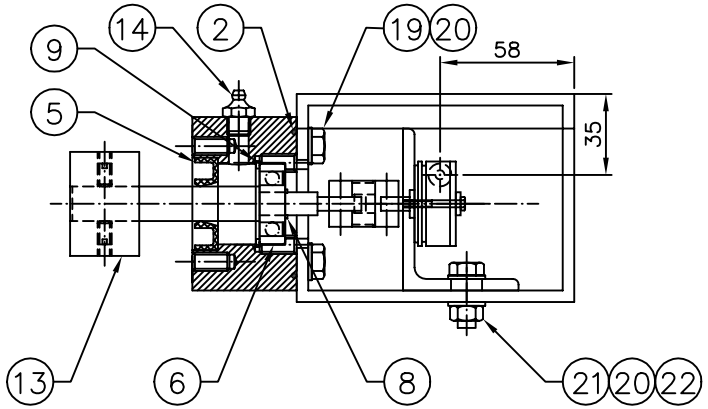

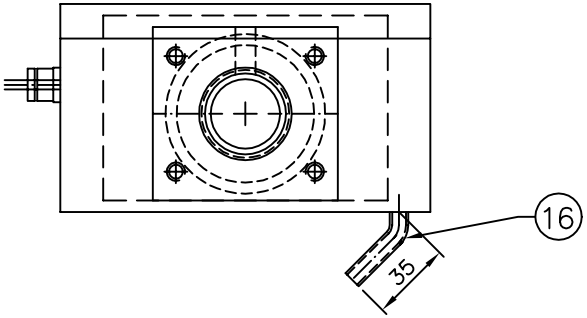

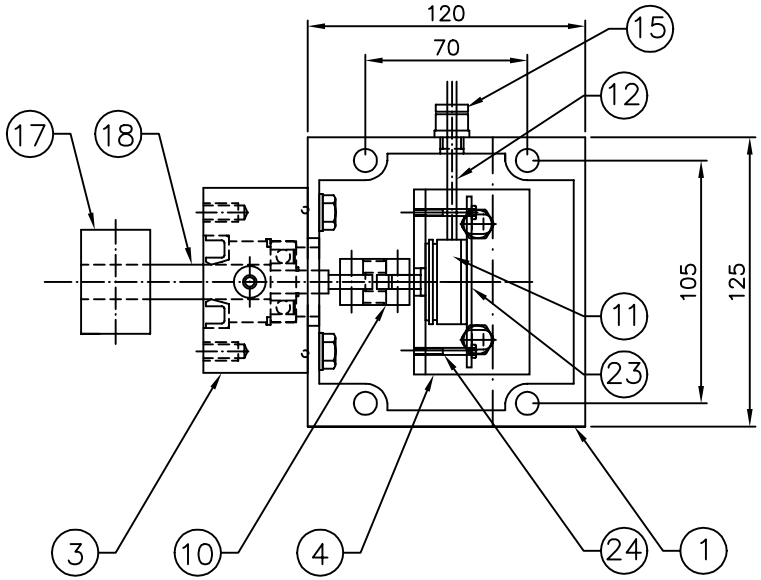

NOS	ITEM / DIMENSION	POS	MATR / DRWG / ART NO	WEIGHT
4	HEX SCREW DIN 933 M8x20	19	8.8 GALV.	–
1	AXLE	18	A4–8131	5
1	ADAPTER	17	A4–8131	–
1	DRAIN PIPE ø8 L–50	16	AISI 316	–
1	CABLE NIPLE PG 9	15	ELZN	–
1	GREASE NIPLE AKR 1/4"BSP	14	A4–1075	–
2	STOP SCREW DIN 913 M6x10	13	ELZN	–
1	CABLE	12		–
1	TRANSMITTER –R52	11	A4–9315	0.2
1	COUPLING	10		–
1	SEEGER I35 DIN 472 NS5144	9		
1	SEEGER A10 DIN 471 NS5143	8		
		7		
1	ROLLER BEARING	6		
1	SIMMERRING	5		
1	ANGLE	4	A4–9513, POS 1	1
1	BEARING BLOCK	3	A3–9720	
1	O–RING 61.90x3.53	2	NBR R165	
1	JUNCTION BOX +X23	1	A4–9315	–

NOS	ITEM / DIMENSION	POS	MATR / DRWG / ART NO	WEIGHT
2	HEX SCREW DIN 931	24	A4–9513, POS 3	–
1	BRACKET FOR TRANSMITTER	23	A4–9513, POS 2	–
2	LOCK NUT ø8	22	8.8 GALV.	–
2	HEX SCREW DIN 933 M8x30	21	8.8 GALV.	–
6	WASHER ø9	20	GALV.	–

THIS DRAWING IS THE PROPERTY OF TTS–NORLIFT % AND MUST NOT BE REPRODUCED WITHOUT OUR WRITTEN CONSENT

DRAWN BY IVS 19.03.01 | CHECKED BY 22.03.01/EOL | APPR BY

PROJECT

TTS - Norlift AS
MARINE CARGO GEAR

DRWG NAME
ANGLE MEASURE BOX
COMPLETE UNIT

SCALE 1:2.5 E

DRWG NO A3–10258 REV 1

MASTER DRWG A3–9721 | REPLACED BY | REPLACES

REV	ALTERATION	DATE / SIGN
1	RELEASED FOR PRODUCTION	FTU 25.01.01

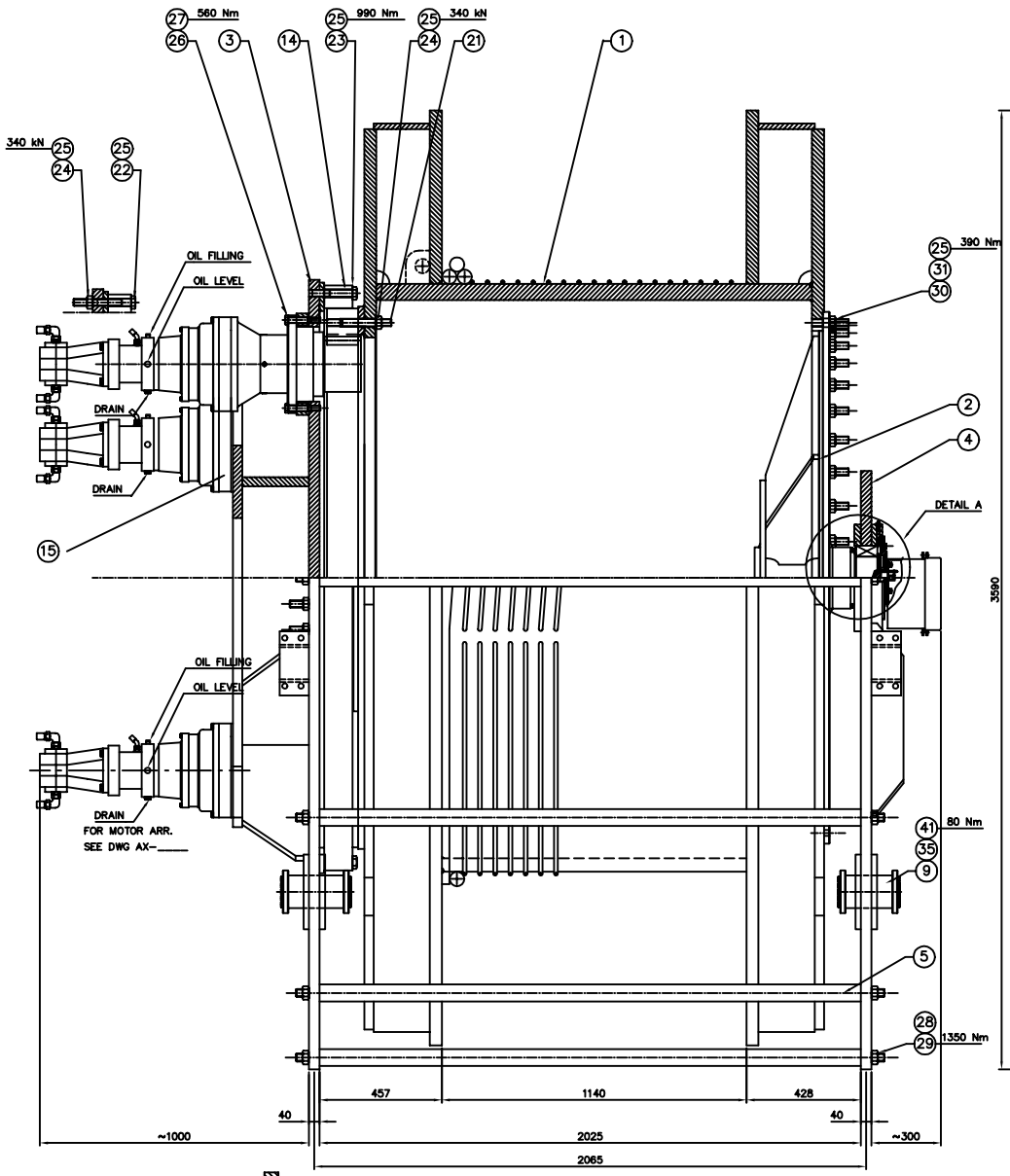

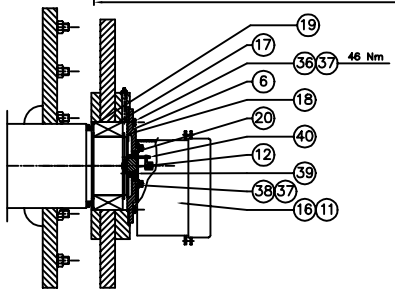

DETAIL A
1:7,5

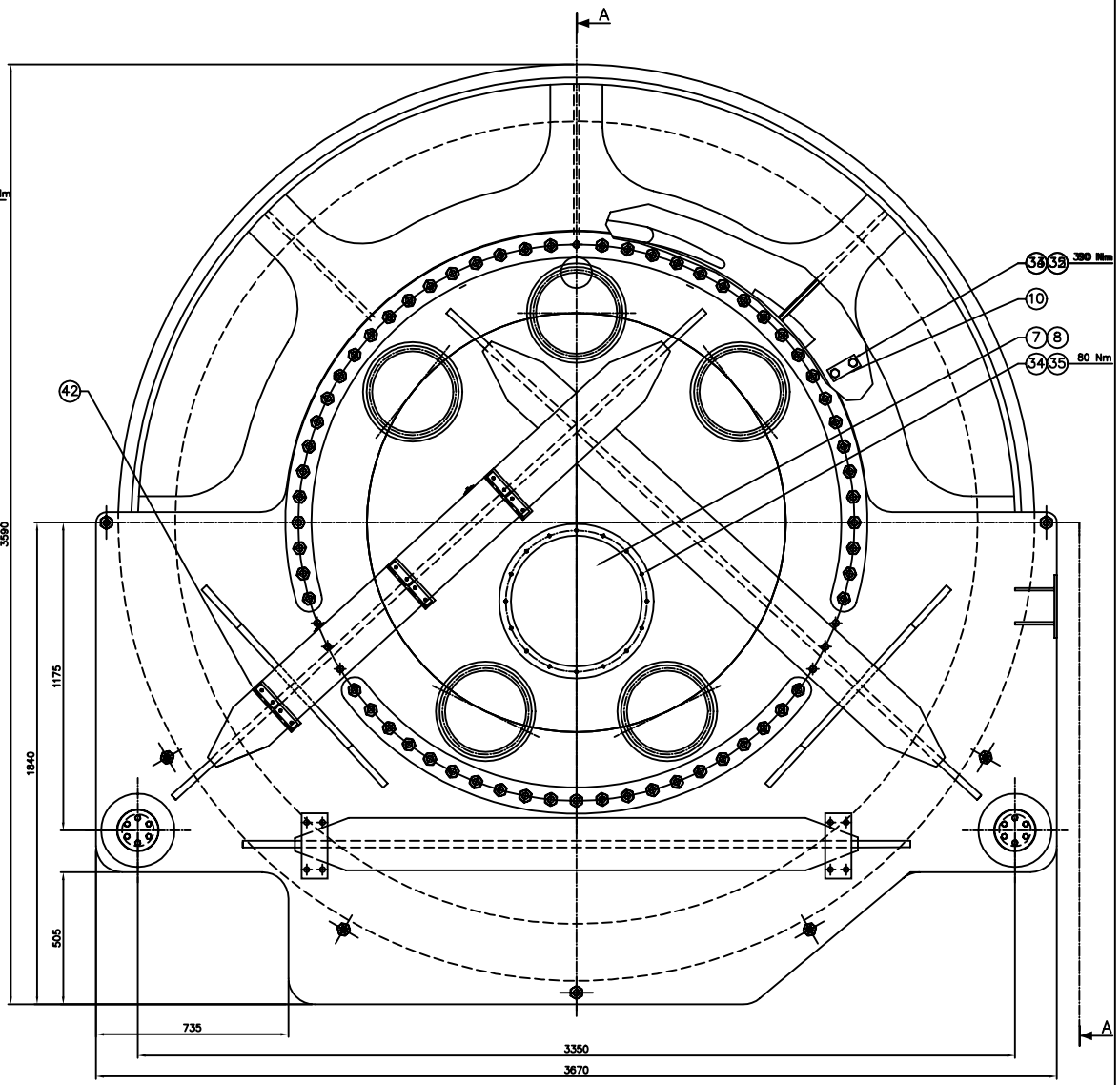

PART LIST	1	A4-9303	23270
NOS ITEM / DIMENSION	POS	MATR / DRWG / ART NO	WEIGHT

THIS DRAWING IS THE PROPERTY OF TTS-NORLIFT % AND MUST NOT BE REPRODUCED WITHOUT OUR WRITTEN CONSENT

DRAWN BY FTU 22.01.01 | CHECKED BY | APPR BY

PROJECT

TTS - Norlift AS
MARINE CARGO GEAR

DRWG NAME: WINCH 50T ASSEMBLY

SCALE 1:10 | E

DRWG NO A1-9806 REV 1

MASTER DRWG | REPLACED BY | REPLACES

REV	ALTERATION	DATE / SIGN
1	RELEASED FOR PRODUCTION	FTU 25.01.01

NOS	ITEM / DIMENSION		POS	MATR / DRWG / ART NO	WEIGHT
129	NUT DIN 6915-10/3.1B	M30	24	H=27	
7	HEX SCREW DIN 6914 - 10.9	M30x150	23	ACC. COMPONENT SPEC.	
61	HEX SCREW DIN 6914-10.9/3.1B	M30x250	22	ACC. COMPONENT SPEC.	
68	STUD BOLT DIN 938-10.9/3.1B	M30x260	21	ACC. COMPONENT SPEC.	
1	SHAFT SEAL DIN 3760		20		-
1	V-RING SEAL		19		-
1	CIRCLIP		18		-
1	SPH. ROLLER BEARING		17		14
1	HOISTING LIM. SW.	-S41	16	A4-9315	10
4	GEARBOX w. BRAKE	ITEM 105	15	HYDR. CIRCUIT	1500
1	SLEW BEARING	630 tm	14	ACC. COMPONENT SPEC.	983
-	GREASE NIPPLE ARR.		13	A4-1075	-
1	ADAPTER	R02	12	A4-1027	
1	GASKET		11	A4-1028	-
8	WIRE CLAMP		10	A4-7035	8
			9		
1	GASKET FOR HATCH		8	A4-8511	1
1	HATCH		7	A3-9286	21
1	FLANGE		6	A3-7559	9
7	SPACER ROD &BOLT		5	A3-10082	350
1	BEARING BRACKET		4	A1-9810	2269
1	GEAR BRACKET		3	A1-9801	3271
1	DRUM SHAFT		2	A1-8784	1202
1	WINCH DRUM		1	A1-8782	13581

THIS DRAWING IS THE PROPERTY OF NORLIFT % AND MUST NOT BE REPRODUCED WITHOUT OUR WRITTEN CONSENT

DRAWN BY FTU 25.01.01	CHECKED BY	APPR BY

PROJECT

TTS - Norlift AS
MARINE CARGO GEAR

DRWG NAME
PART LIST
FOR A1-9806
SHEET 1/2

SCALE 1:1 E

DRWG NO A4-9303 REV 1

MASTER DRWG	REPLACED BY	REPLACES

REV	ALTERATION	DATE / SIGN
1	RELEASED FOR PRODUCTION	FTU 25.01.01

TOTAL WEIGHT[Kg] ~23268Kg

NOS	ITEM / DIMENSION		POS	MATR / DRWG / ART NO	WEIGHT
48	HEX SCREW DIN 933–8.8	M12x70	41	ElZn	3
1	CYL PIN DIN 7	ø6x55	40		–
3	CYL SCREW DIN 912–8.8	M8x25	39	ElZn	–
4	CYL SCREW DIN 912–8.8	M10x20	38	ElZn	–
10	WASHER DIN 125A	ø10.5/20x2	37	ElZn	–
6	HEX SCREW DIN 933–8.8	M10x25	36	ElZn	–
64	WASHER DIN 125A	ø13/24x2.5	35	GALV	–
16	HEX SCREW DIN 933–8.8	M12x30	34	ElZn	1
16	HEX SCREW DIN 931–8.8	M20x100	33	ElZn	3
16	WASHER DIN 125A	ø21/37x3	32	GALV	1
44	LOCK NUT DIN 985–8	M30	31	ElZn	
44	STUD BOLT DIN 938–8.8	M30x55	30	ElZn	
14	WASHER DIN 125A	ø31/56x4	29	GALV	1
14	LOCK NUT DIN 985–8	M30	28	ElZn	4
120	WASHER HB 200	ø21/36	27	ElZn	2
120	HEX SCREW DIN 931–10.9	M20x120	26	ElZn	38
241	WASHER DIN 6916/2.1	ø31/55	25	SURF. GRIND BOTH SIDES	

THIS DRAWING IS THE PROPERTY OF NORLIFT ⅝ AND MUST NOT BE REPRODUCED WITHOUT OUR WRITTEN CONSENT

DRAWN BY FTU 25.01.01 | CHECKED BY | APPR BY

PROJECT

TTS - Norlift AS
MARINE CARGO GEAR

DRWG NAME
PART LIST
FOR A1–9806
SHEET 2/2

SCALE 1:1 E

DRWG NO A4–9303 REV 1

MASTER DRWG | REPLACED BY | REPLACES

Planetary gear

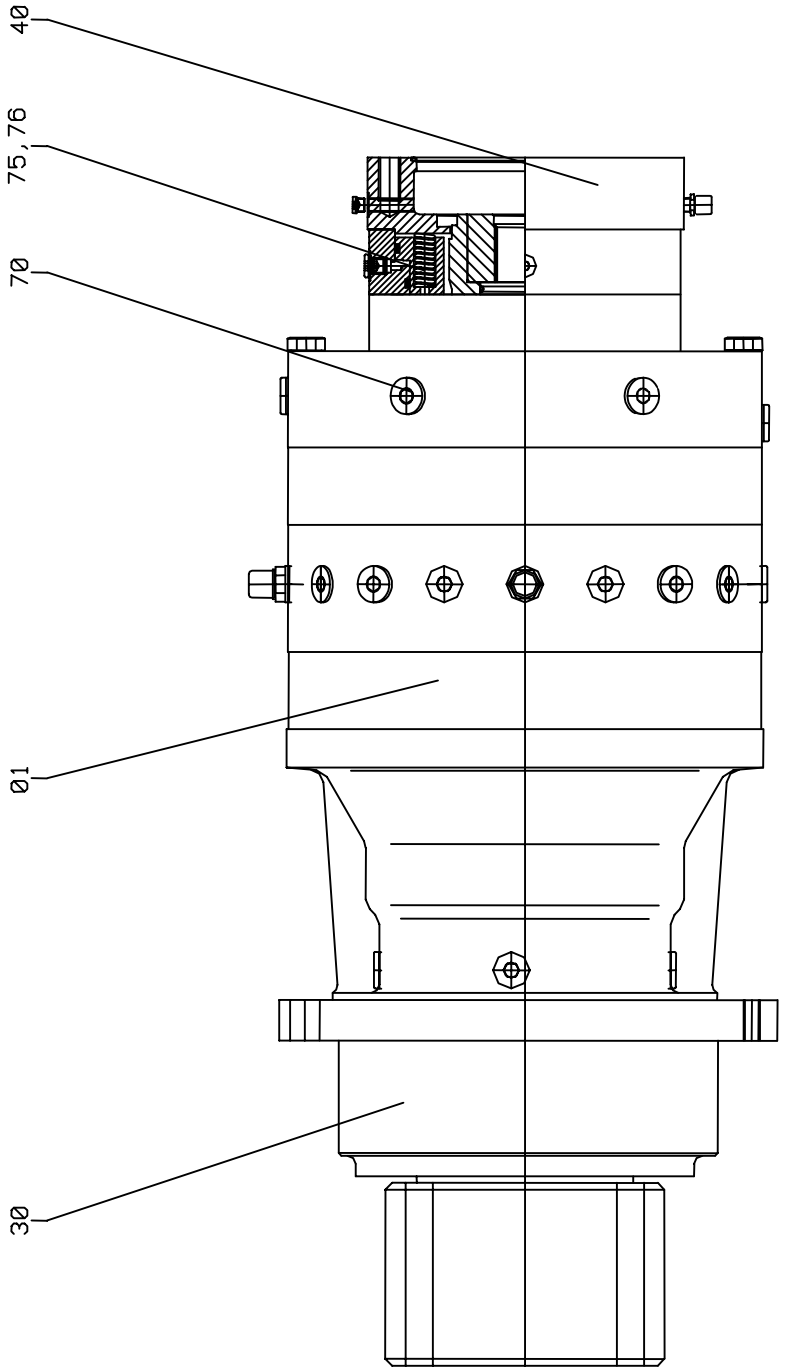

NOTE!
When ordering spare parts,
or in any correspondance relating to the gearbox,
the number stamped on the gearbox nameplate
must be quoted.

Planetary stage

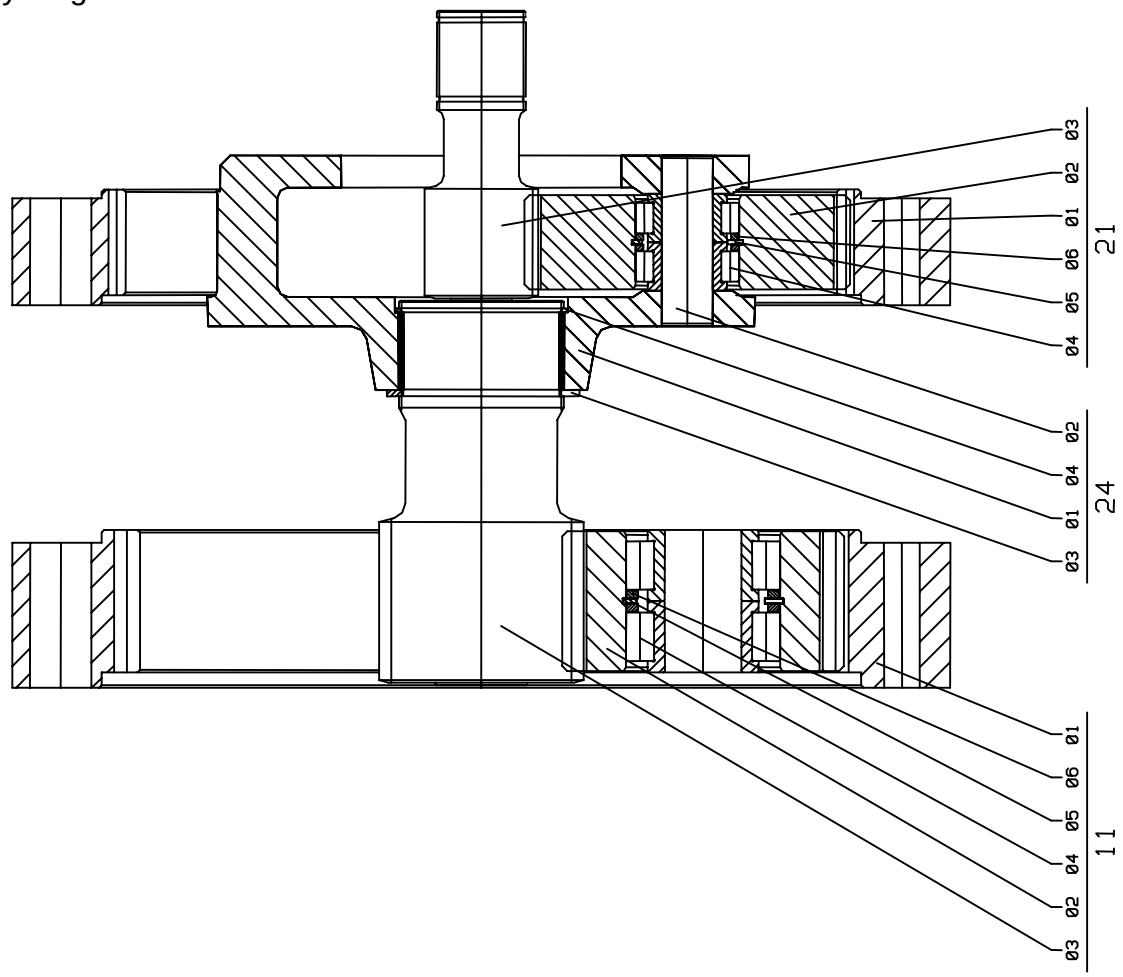

NOTE!
When ordering spare parts,
or in any correspondance relating to the gearbox,
the number stamped on the gearbox nameplate
must be quoted.

Output housing

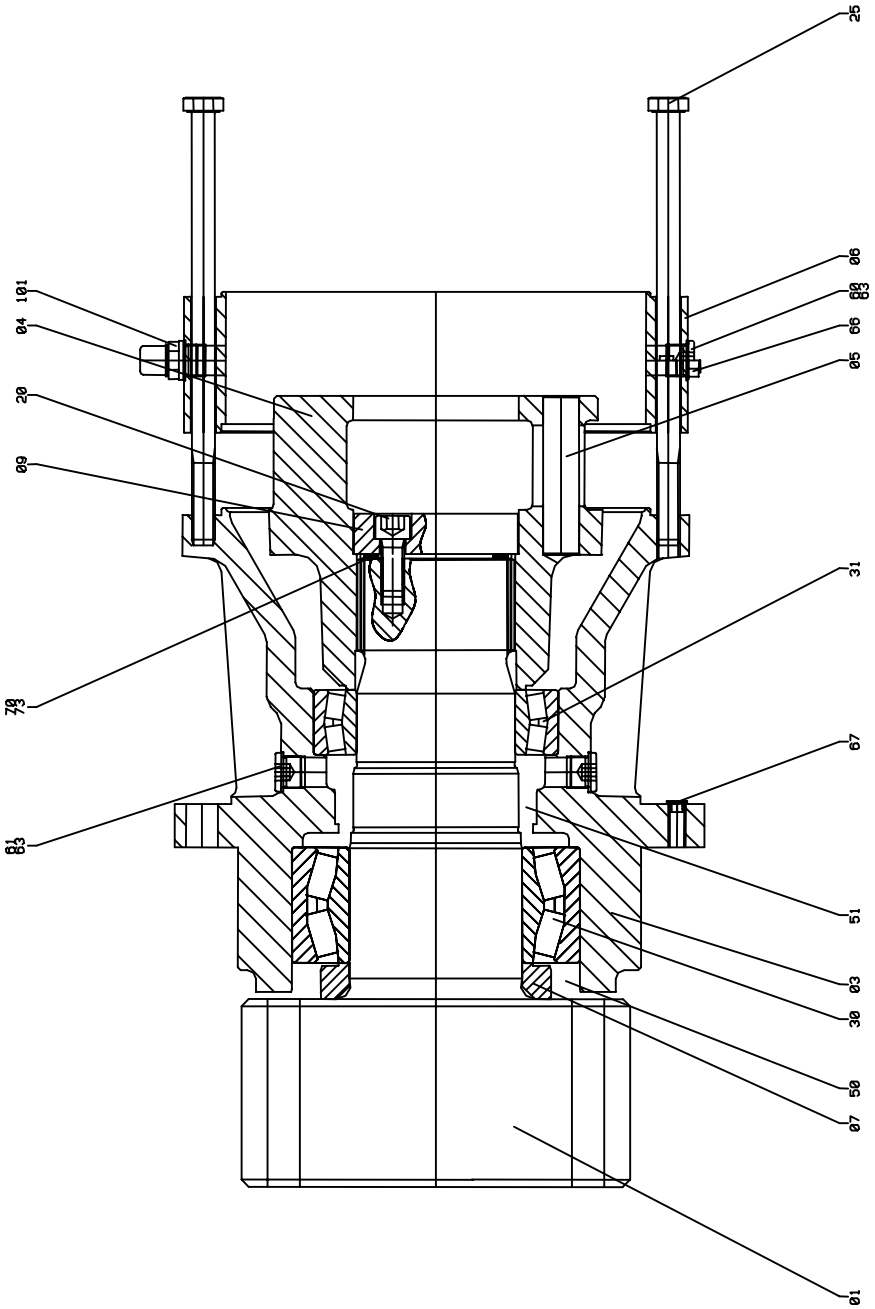

NOTE!
When ordering spare parts,
or in any correspondance relating to the gearbox,
the number stamped on the gearbox nameplate
must be quoted.

Drive in

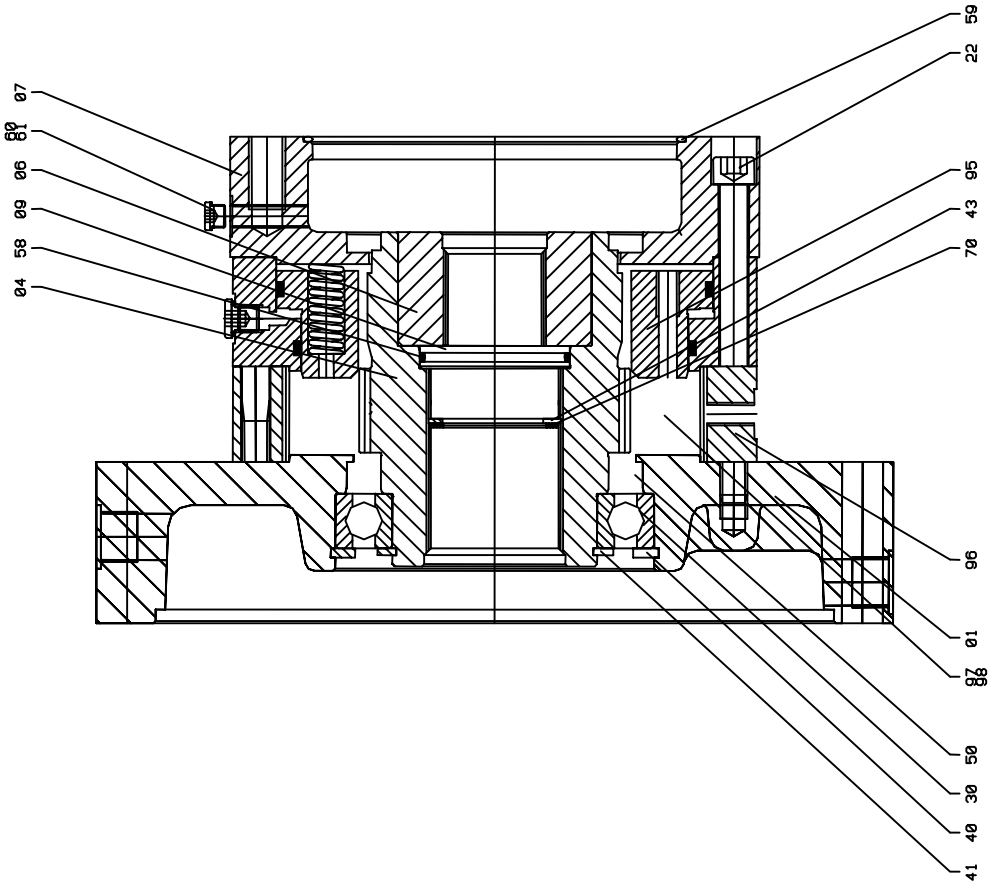

NOTE!
When ordering spare parts,
or in any correspondance relating to the gearbox,
the number stamped on the gearbox nameplate
must be quoted.

Hydraulic multiple disc brake

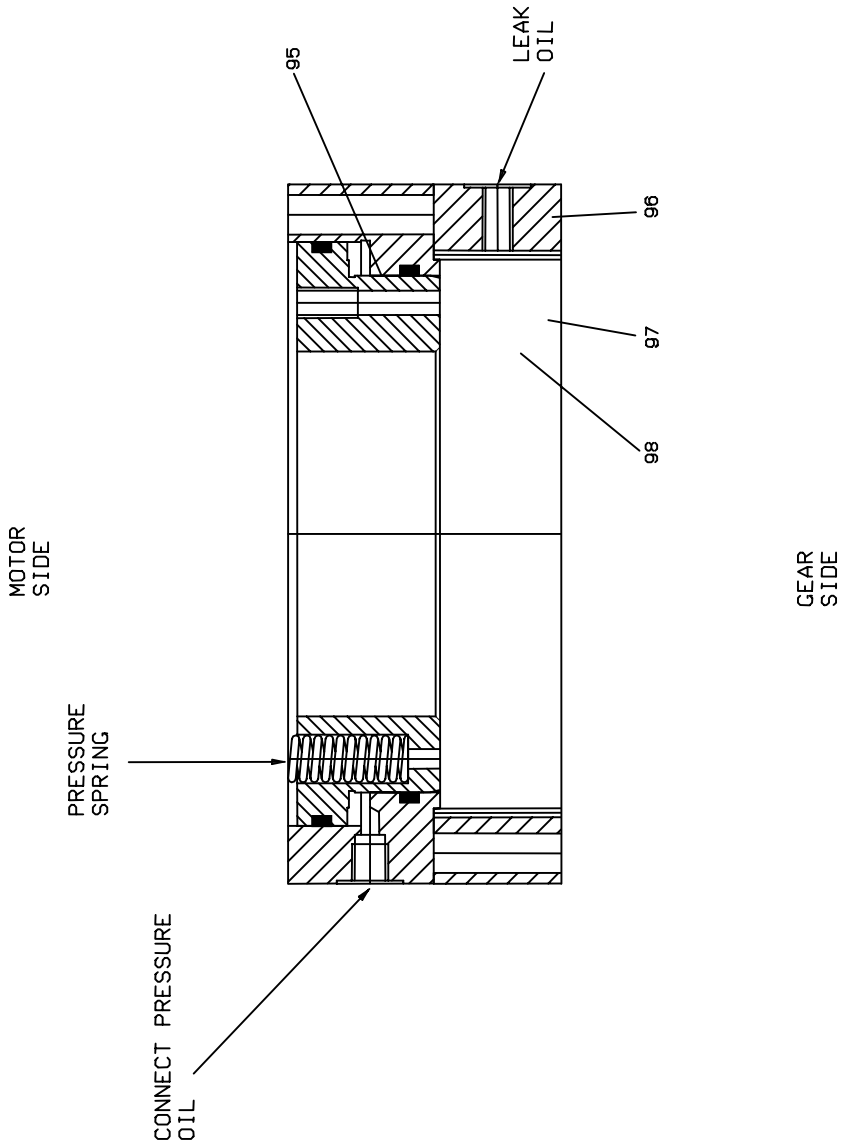

NOTE!
When ordering spare parts,
or in any correspondance relating to the gearbox,
the number stamped on the gearbox nameplate
must be quoted.

Oil control

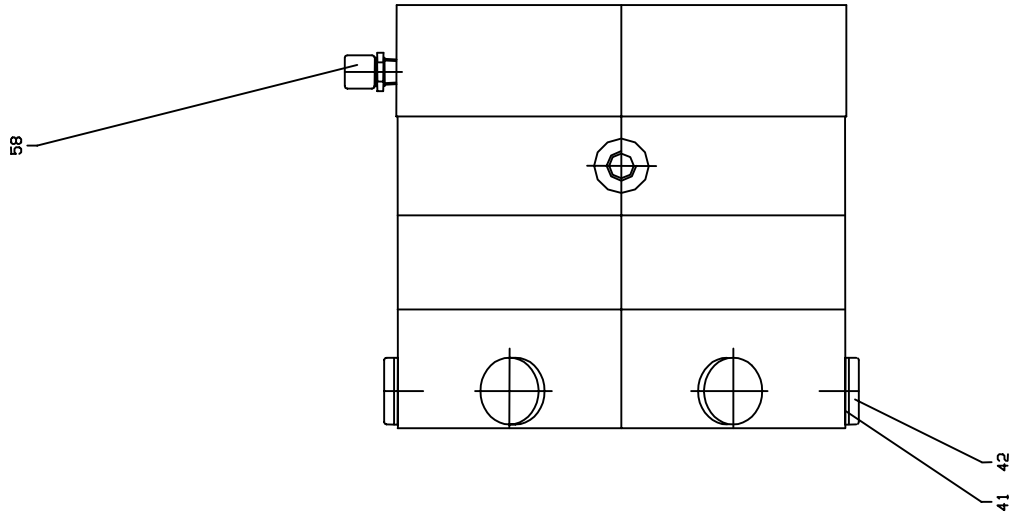

NOTE!
When ordering spare parts,
or in any correspondance relating to the gearbox,
the number stamped on the gearbox nameplate
must be quoted.

S P A R E - P A R T - L I S

		WEIGHT	OIL QTY
SERIAL - NO.	101 - 105	315,0 KG	6,5 LITER

POS-NO.	QTY	DESCRIPTION - ENGLISH	TECHNICAL - DATA	
1	1,0	PLANETARY STAGE		
1/ 11	1,0	PLANETARY STAGE		
1/ 11/ 1	1,0	INTERNAL-WHEEL		
1/ 11/ 2	3,0	PLANETARY WHEEL		
1/ 11/ 3	1,0	SUN WHEEL		
1/ 11/ 4	6,0	CYLINDER ROLLER BEARING	30X 60,49X28/	
1/ 11/ 5	3,0	CIR CLIP	---,--X 60,00X 2,00	DIN 472
1/ 11/ 6	6,0	WASHER	55,30X 60,00X 3,25	
1/ 21	1,0	PLANETARY STAGE		
1/ 21/ 1	1,0	INTERNAL-WHEEL		
1/ 21/ 2	3,0	PLANETARY WHEEL		
1/ 21/ 3	1,0	SUN WHEEL		
1/ 21/ 4	6,0	CYLINDER ROLLER BEARING	30X 60,49X28/	
1/ 21/ 5	3,0	CIR CLIP	---,--X 60,00X 2,00	DIN 472
1/ 21/ 6	6,0	WASHER	55,30X 60,00X 3,25	
1/ 24	1,0	PLANETARY CARRIER		
1/ 24/ 1	1,0	PLANETARY CARRIER		
1/ 24/ 2	3,0	PLANETARY AXLE		
1/ 24/ 3	1,0	CIR CLIP	70,00X---,--X 2,50	DIN 471
1/ 24/ 4	1,0	CIR CLIP	70,00X---,--X 2,00	
30	1,0	LONG OUTPUT HOUSING		
30/ 1	1,0	PINION SHAFT		
30/ 3	1,0	OUTPUT HOUSING		
30/ 4	1,0	PLANETARY CARRIER		
30/ 5	3,0	PLANETARY AXLE		
30/ 6	1,0	INTERMEDIATE HOUSING		
30/ 7	1,0	RING		
30/ 9	1,0	HOLDING DISC		
30/ 20	3,0	CYLINDRICAL SCREW	M 16X 40 ZN 8.8	DIN 912
30/ 25	18,0	HEXAGON BOLT	M 16X300 ZN 8.8	DIN 931
30/ 30	1,0	PENDULUM ROLLER BEARING	120X200X 80	DIN 635
30/ 31	1,0	PENDULUM ROLLER BEARING	110X170X 45	DIN 635
30/ 50	1,0	SHAFT SEALING RING	160X200X15 BASL NBR	DIN3760
30/ 51	2,0	SHAFT SEALING RING	115X140X12 BA NBR	DIN3760
30/ 60	1,0	PLUG	M 22X 1,5 ZN MAGN.	DIN 908
30/ 61	14,0	PLUG	M 22X 1,5 ZN	DIN 908
30/ 63	15,0	SEALING RING	A 22X 27X1,5	DIN7603
30/ 66	2,0	OIL SIGHT GLASS	WEICHEISEN /-30+120	
30/ 67	4,0	SEALING PLUG	---,--X 10,70X 5,50	5
30/ 70	3,0	WASHER	80,00X100,00X 1,00	DIN 988
30/ 73	2,0	WASHER	80,00X100,00X 0,20	DIN 988
30/101	1,0	VENT FILTER	0,2 BAR	M22*1,5

NOTE!
When ordering spare parts,
or in any correspondance relating to the gearbox,
the number stamped on the gearbox nameplate
must be quoted.

POS-NO.	QTY	DESCRIPTION - ENGLISH	TECHNICAL - DATA	
40	1,0	DRIVE IN		
40/ 1	1,0	BRAKE FLANGE		
40/ 4	1,0	DRIVING SLEEVE		
40/ 6	1,0	SLEEVE		
40/ 7	1,0	MOTOR FLANGE		
40/ 9	1,0	WASHER		
40/ 22	12,0	CYLINDRICAL SCREW	M 12X160 ZN 8.8	DIN 912
40/ 30	1,0	BALL BEARING	90X140X24	DIN 625
40/ 40	1,0	CIR CLIP	---,--X140,00X 4,00	DIN 472
40/ 41	1,0	CIR CLIP	90,00X---,--X 3,00	DIN 471
40/ 43	1,0	CIR CLIP	---,--X 42,00X 1,75	DIN 472
40/ 50	1,0	SHAFT SEALING RING	100X130X12 BA FPM	DIN3760
40/ 58	1,0	SEALING RING	59,00X3 NBR-72	
40/ 59	1,0	SEALING RING	180,00X3 NBR-70	
40/ 60	2,0	PLUG	M 10X 1,0 ZN	DIN 908
40/ 61	2,0	SEALING RING	A 10X 13,5X1,0	DIN7603
40/ 70	2,0	WASHER	28,00X 40,00X 1,00	DIN 988
40/ 95	1,0	HYDR.-PART FOR DISC BRAKE		
40/ 96	1,0	CLUTCH PLATE CARRIER		
40/ 97	8,0	MULTIPLE DISK	DIN 867RAD-NUT-L2,30	
40/ 98	7,0	MULTIPLE DISK	DIN 867--------L2,20	
70	1,0	OIL CONTROL		
70/ 41	6,0	SEALING RING	A 22X 27X1,5	DIN7603
70/ 42	6,0	PLUG	M 22X 1,5 ZN	DIN 908
70/ 58	1,0	VENT FILTER	0,04 BAR MESSING	M10*1,0
75	16,0	SPRINGS		
75/ 1	16,0	SPRINGS		
76	16,0	SPRINGS		
76/ 1	16,0	SPRINGS		

*** END OF PART LIST

NOTE!
When ordering spare parts,
or in any correspondance relating to the gearbox,
the number stamped on the gearbox nameplate
must be quoted.

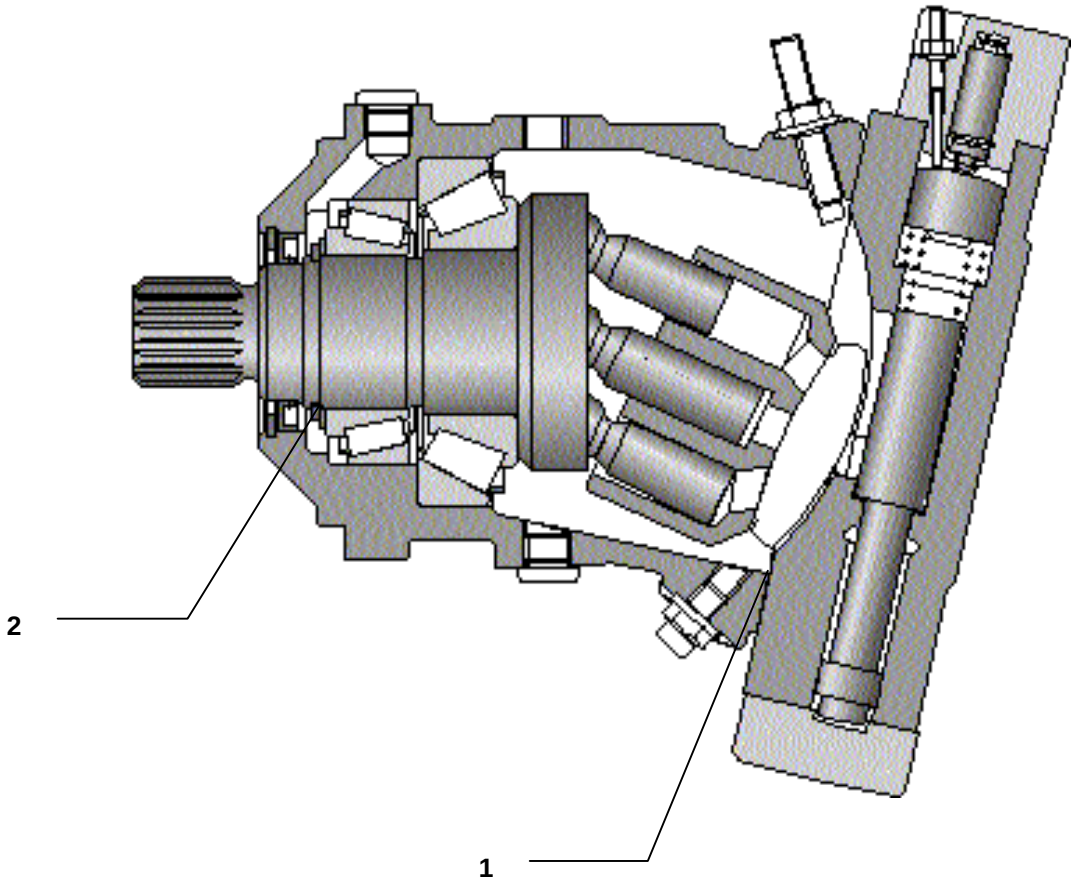

SEAL KIT CONSISTING OF GASKET POS. 1-2.

NOTE! REPLACEMENT PARTS IN THE MOTOR CAN NOT BE SUPPLIED.

REV	ALTERATION	SIGN / DATE
1	RELEASED FOR PRODUCTION	RR 30.01.98

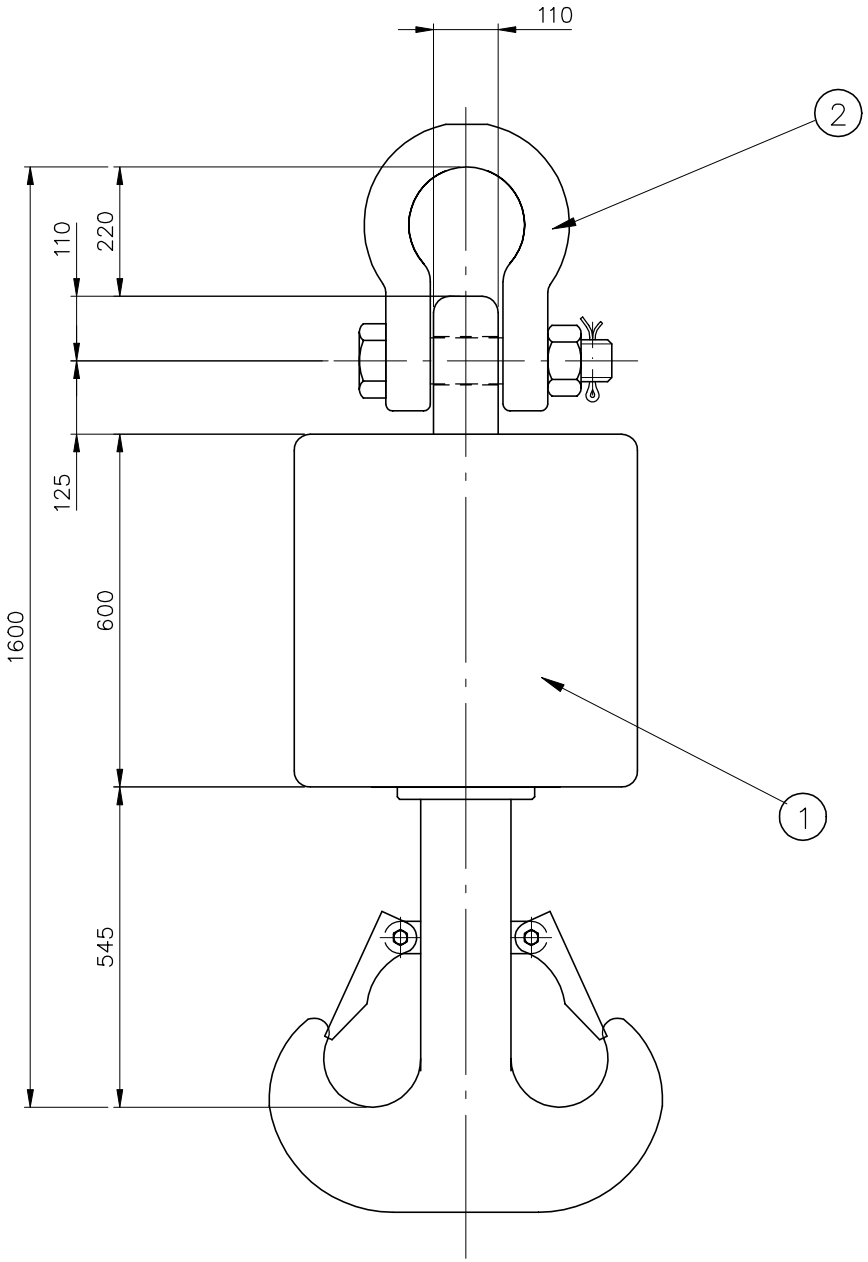

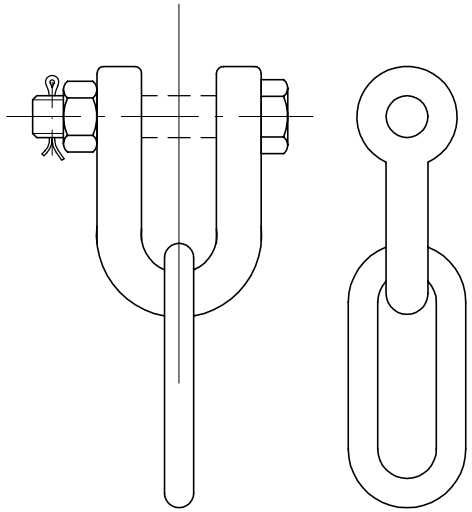

TOTAL WEIGHT, APPROX. ~ 1250 Kg

NOS	ITEM / DIMENSION	POS	MATR / DRWG / ART NO	WEIGHT
1	H-SHACKLE SWL 85T	2	G-4169	40
1	SWIVEL HOOK SWL=50T	1	32V DIN15402	1200

THIS DRAWING IS THE PROPERTY OF TTS-NORLIFT % AND MUST NOT BE REPRODUCED WITHOUT OUR WRITTEN CONSENT

DRAWN BY RR 21.01.98 | CHECKED BY | APPR BY

PROJECT

TTS - Norlift AS
MARINE CARGO GEAR

DRWG NAME
ASSEMBLY SWIVEL HOOK 50T

SCALE 1:10 E

DRWG NO A3-7619 REV 1

MASTER DRWG | REPLACED BY | REPLACES

REV	ALTERATION	DATE / SIGN
1	RELEASED FOR PRODUCTION	AJA/25.01.01

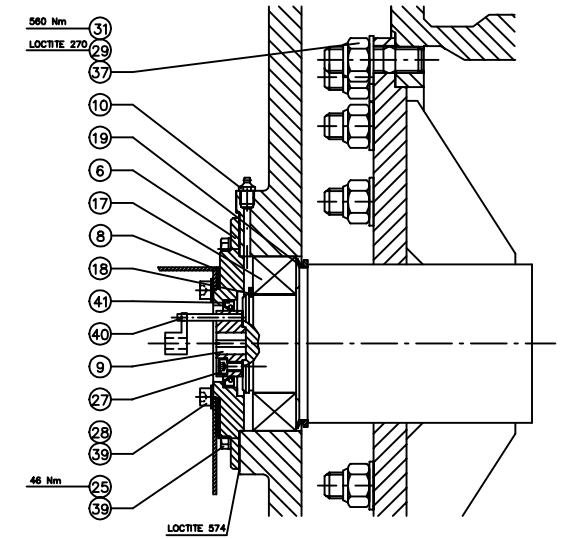

DRUM SHAFT ARR.
1:2.5

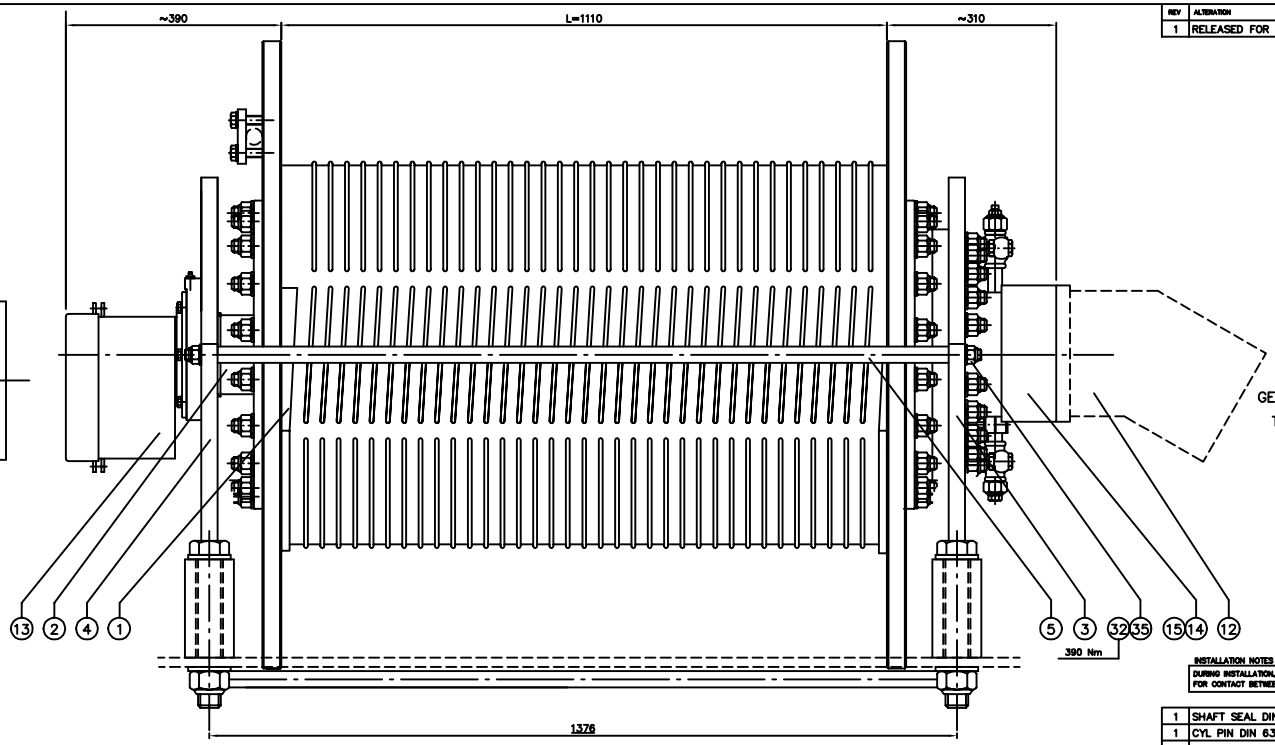

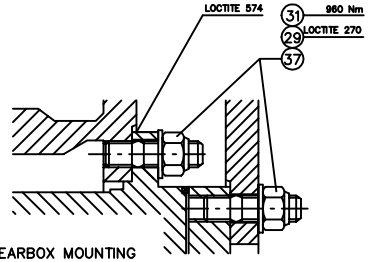

GEARBOX MOUNTING
TYPICAL SECTION
1:2.5

INSTALLATION NOTES

DURING INSTALLATION, THE WINCH HAS TO BE PUSHED FORWARD FOR CONTACT BETWEEN WINCH BRACKETS AND FOUNDATION.

TOTAL WEIGHT [KG] ~2350

1	SHAFT SEAL DIN 3760	60x80x10 BA	41		–
1	CYL PIN DIN 6325	ø6x60	40		–
10	WASHER DIN 125 A	ø10.5	39	GALV	–
			38		
58	WASHER DIN 125/ HARD.	ø25	37	GALV	2
8	WASHER DIN 125 A	ø17	36	GALV	–
6	WASHER DIN 125 A	ø21	35	GALV	–
8	WASHER DIN 7989 A	ø45	34	GALV	1
			33		
6	LOCK NUT DIN 985	M20	32	8 ELZN	1
58	LOCK NUT DIN 985	M24	31	10 ELZN	6
4	LOCK NUT DIN 985	M42	30	8 GALV	3
58	STUD BOLT DIN 939	M24x60	29	10.9 ELZN	15
4	CYL SCREW ISO 4762/DIN 912	M10x35	28	12.9	–
3	CYL SCREW ISO 4762/DIN 912	M8x25	27	12.9	–
4	HEX SCREW ISO 4014	M6x90	26	8.8 GALV	–
6	HEX SCREW ISO 4017	M10x30	25	8.8 GALV	–
8	HEX SCREW ISO 4014	M16x65	24	8.8 GALV	–
4	HEX SCREW ISO 4014	M42x280	23	8.8 GALV	14
4	DISTANCE PIPE	ø10x1,5 L=30	22	AISI 316	–
4	PLATE	FOR PIPE 3/4"	21	NS 5555	–
2	CLAMP	FOR PIPE 3/4"	20	NS 5555	–
1	V-RING SEAL		19		–
1	CIRCLIP DIN 471		18		–
1	BEARING		17		1
1	LEVEL/FILLER/VENT PIPE DETAILS		16	PART OF GEARBOX	–
1	MOTOR CONNECTION		15	PART OF GEARBOX	–
1	GEARBOX WITH BRAKE	ITEM 155	14	HYDR. CIRCUIT	400
1	ELEC. LIMIT SWITCH	-S40	13	A4-9315	5
1	MOTOR ARRANGEMENT		12		50
1	OIL LEVEL STICK		11		–
1	GREASE NIPPLE ARRANGEMENT		10	A4-1075	–
1	ADAPTER	R02/R03	9	A4-1027	1
1	GASKET	R02/R03	8	A4-1028	–
4	WIRE CLAMP		7	A4-1024	–
1	FLANGE	R02/R03	6	A3-1027	4
3	SPACER ROD	L=1344	5	A3-9250	24
1	BEARING BRACKET		4	A2-7684	228
1	GEAR BRACKET		3	A2-7683	203
1	DRUM SHAFT		2	A2-1021	94
1	WINCH DRUM	L=1110	1	A1-9814	1300
NOS	ITEM / DIMENSION		POS	MATR / DWG / ART NO	WEIGHT

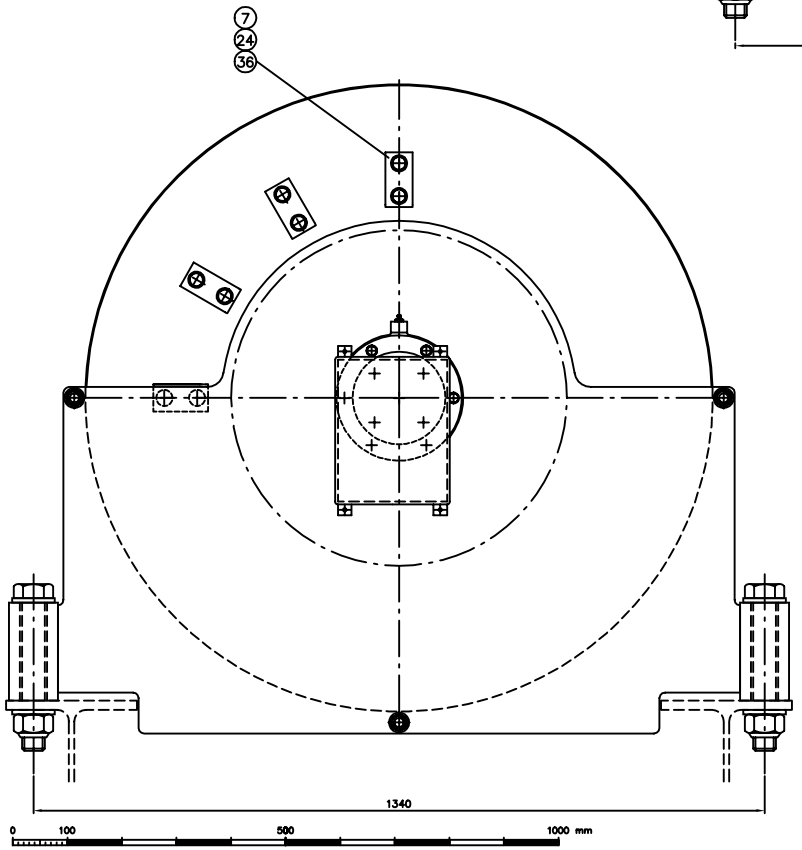

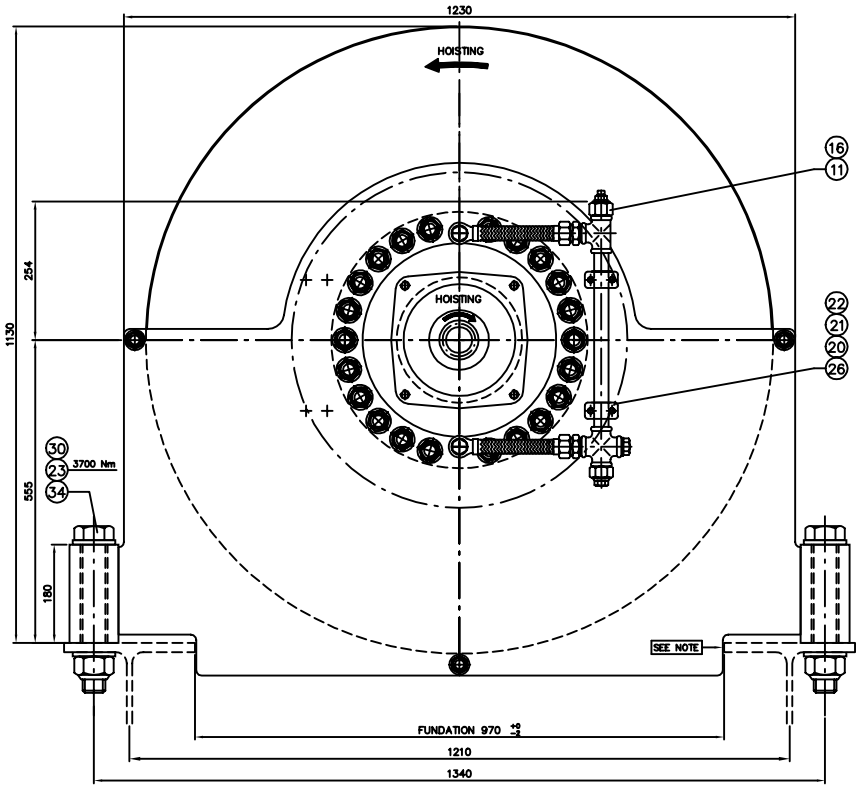

THIS DRAWING IS THE PROPERTY OF TTS-NORLIFT % AND MUST NOT BE REPRODUCED WITHOUT OUR WRITTEN CONSENT

DRAWN BY AJA 25.01.01 | CHECKED BY | APPR BY

PROJECT: WINCH 10 t

TTS - Norlift AS
MARINE CARGO GEAR

DWG NAME: WINCH ASSEMBLY

SCALE 1:5 | E

DWG NO A1-9815 REV 1

MASTER DWG | REPLACED BY | REPLACES

WINCH GEAR

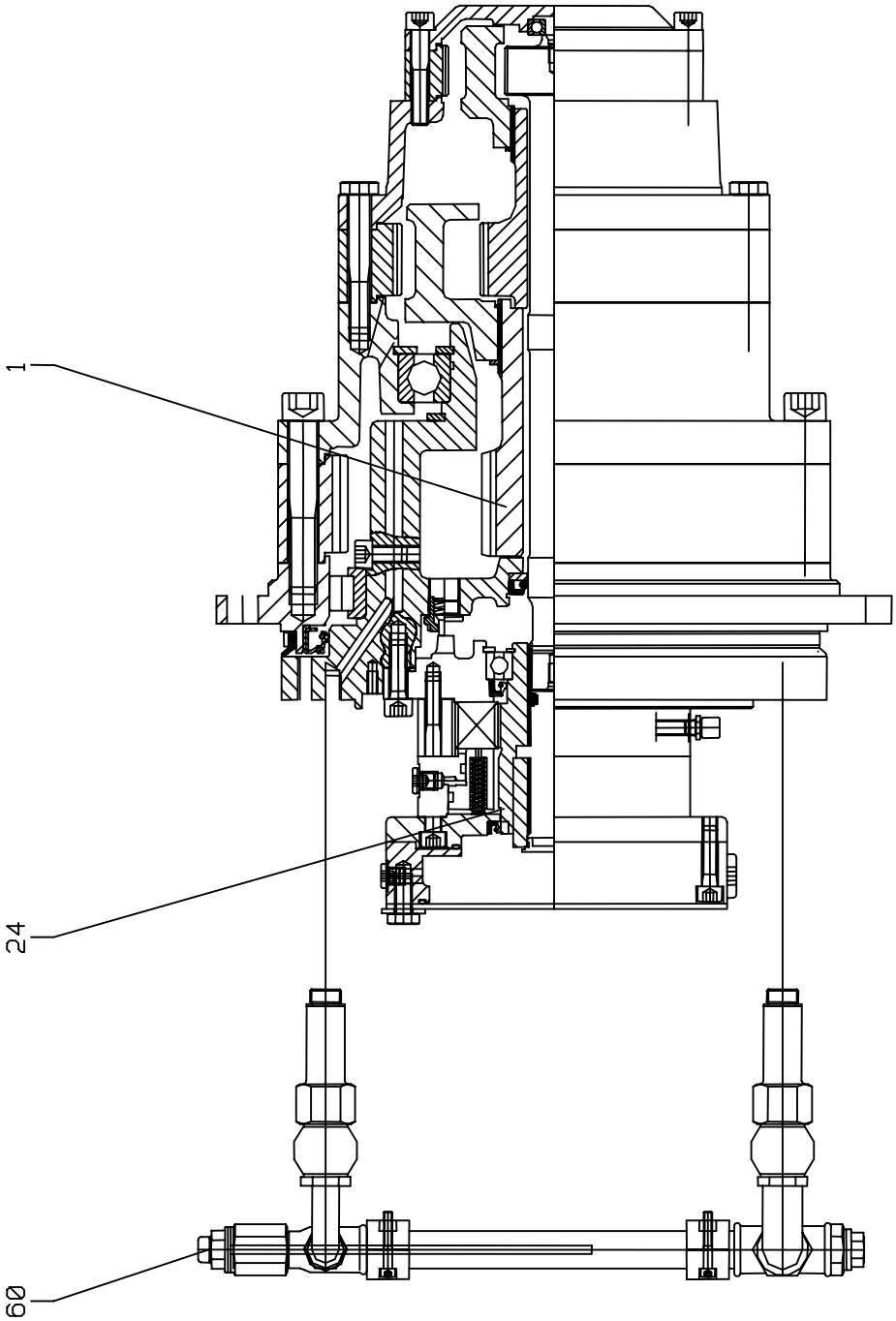

NOTE!
When ordering spare parts,
or in any correspondance relating to the gearbox,
the number stamped on the gearbox nameplate
must be quoted.

GEAR

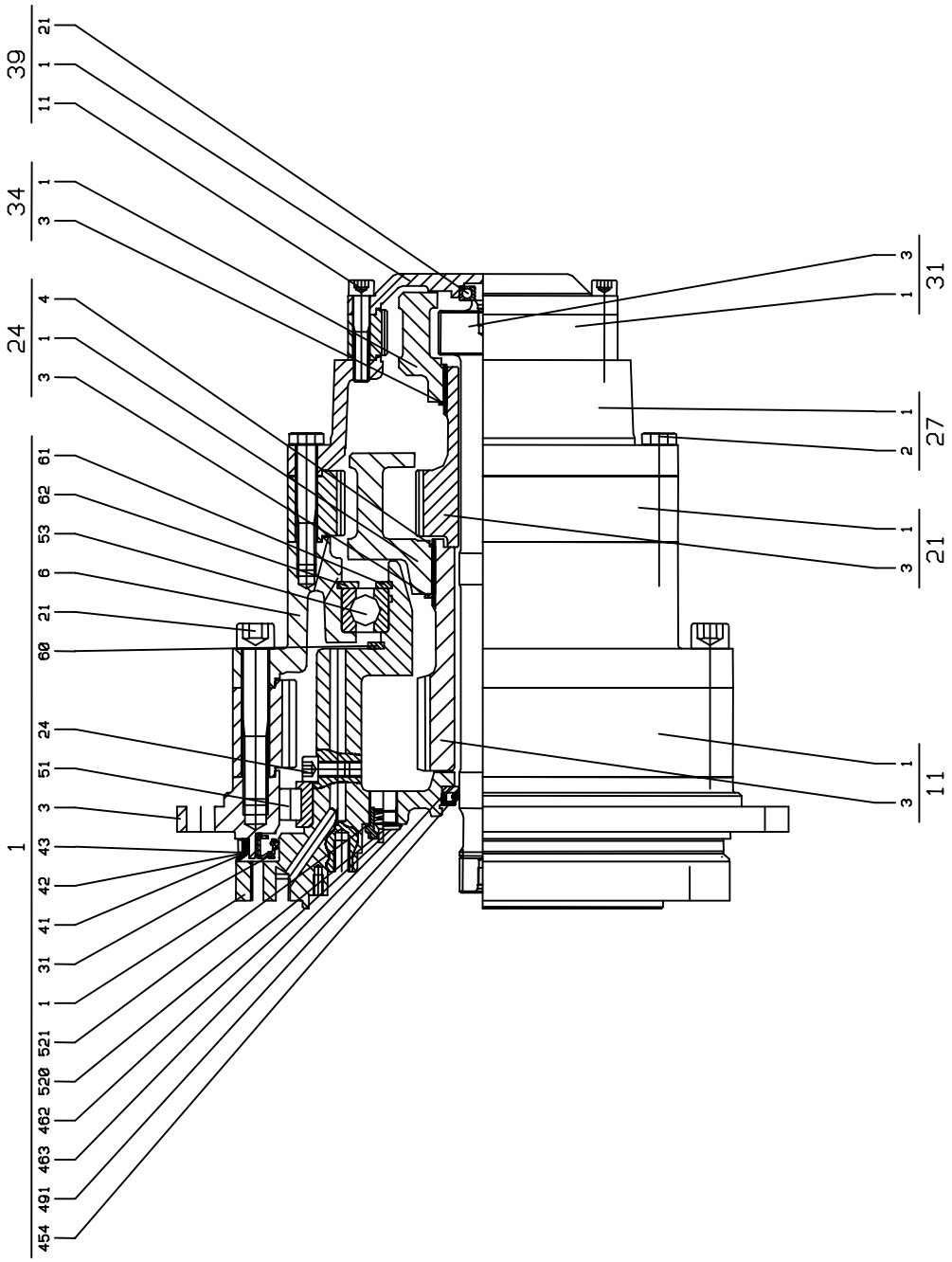

NOTE!
When ordering spare parts,
or in any correspondance relating to the gearbox,
the number stamped on the gearbox nameplate
must be quoted.

DRIVE IN

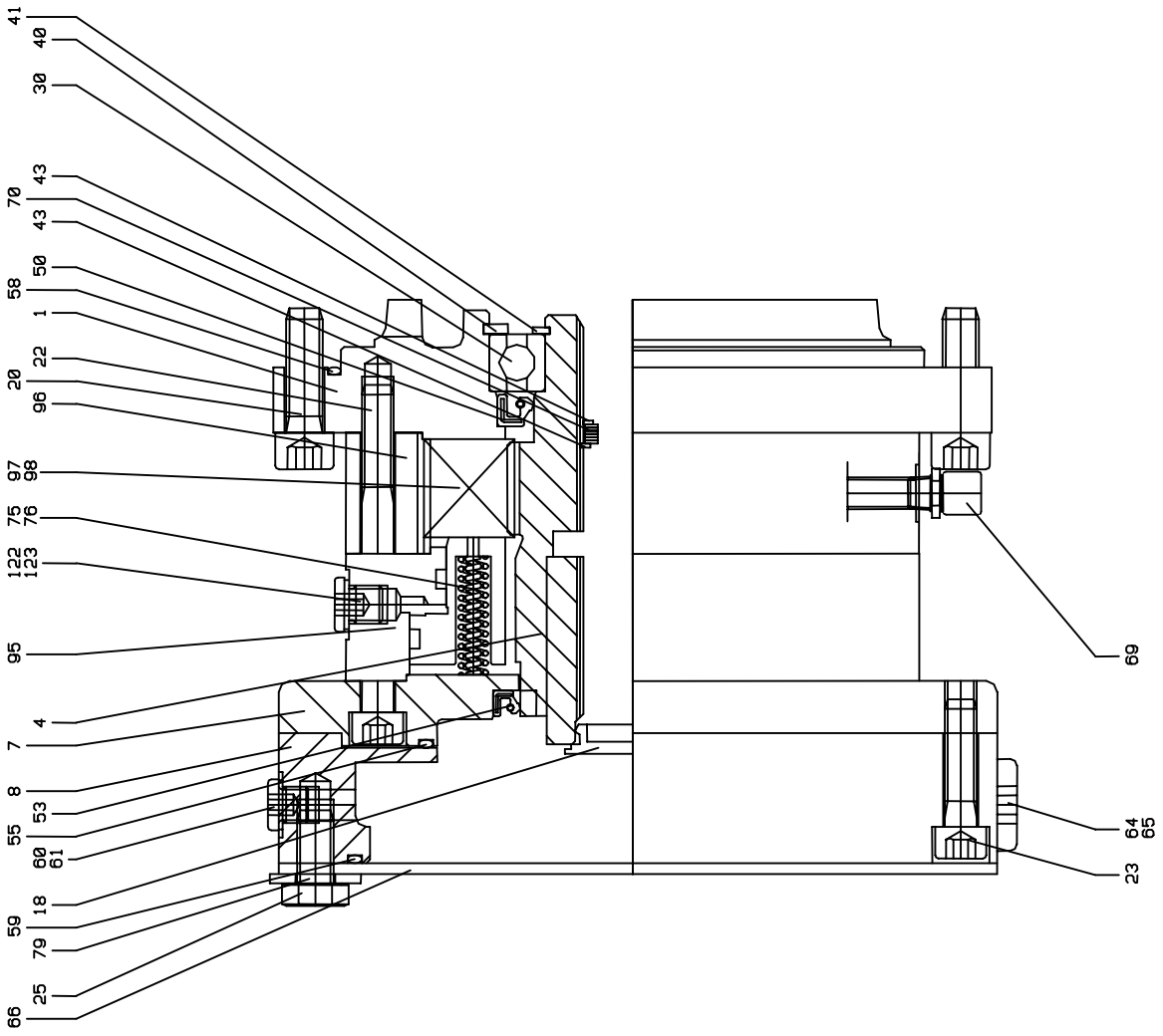

NOTE!
When ordering spare parts,
or in any correspondance relating to the gearbox,
the number stamped on the gearbox nameplate
must be quoted.

HYDRAULIC MULTIPLE DISC BRAKE

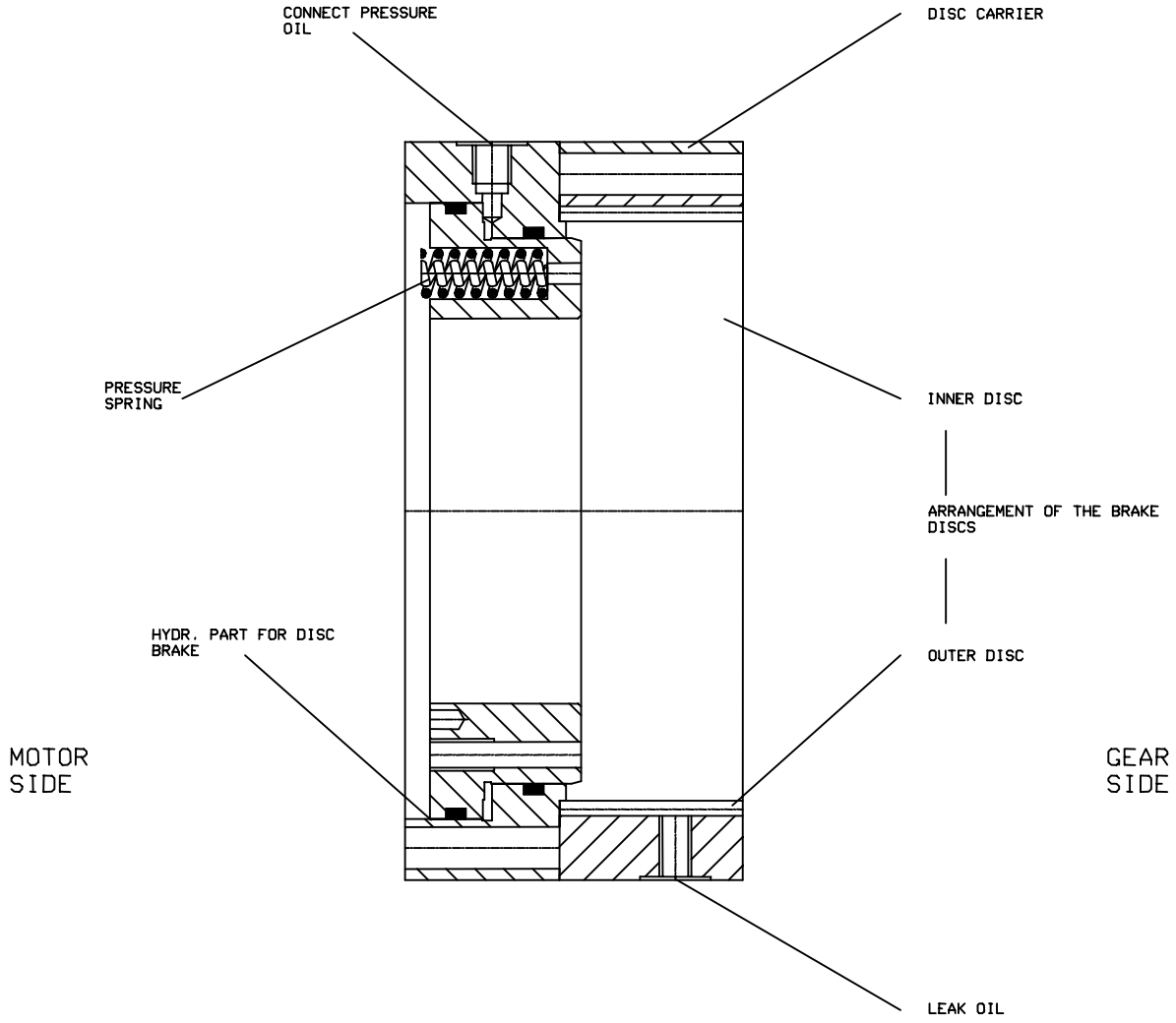

NOTE!
When ordering spare parts,
or in any correspondance relating to the gearbox,
the number stamped on the gearbox nameplate
must be quoted.

OIL PIPE

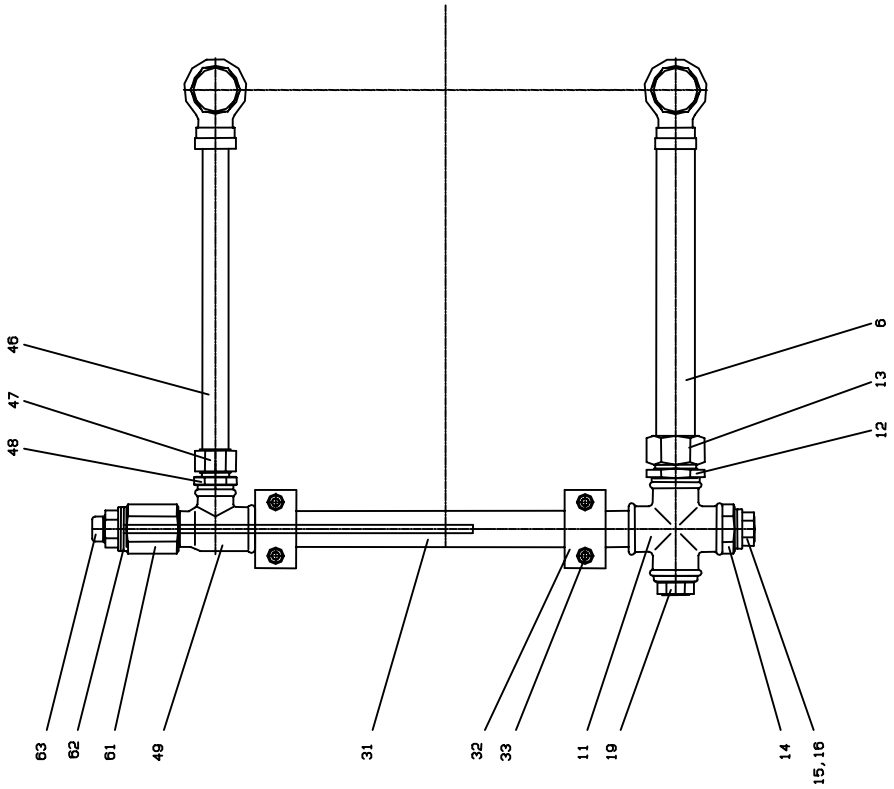

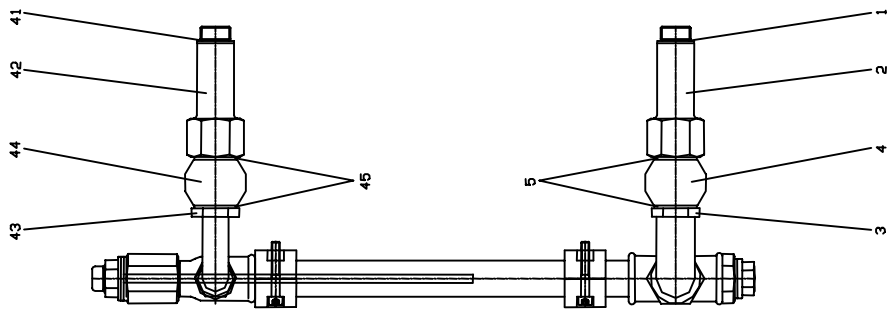

NOTE!
When ordering spare parts,
or in any correspondance relating to the gearbox,
the number stamped on the gearbox nameplate
must be quoted.

S P A R E - P A R T - L I S T

SERIAL - NO.	101 - 101	WEIGHT 395,0 KG	OIL QTY 10,0 LITER

POS-NO.	QTY	DESCRIPTION - ENGLISH	TECHNICAL - DATA		
1	1,0	GEAR + OUTPUT			
1/ 1	1,0	OUTPUT DRIVE			
1/ 1/ 1	1,0	PLANETARY CARRIER			
1/ 1/ 3	1,0	BEARING RING			
1/ 1/ 6	1,0	INTERMEDIATE HOUSING			
1/ 1/ 21	18,0	CYLINDRICAL SCREW	M 20X130	ZN 8.8	DIN 912
1/ 1/ 24	3,0	CYLINDRICAL SCREW	M 12X 20	ZN 8.8	DIN 912
1/ 1/ 31	1,0	SHAFT SEALING RING	380X420X20	B2 FPM	DIN3760
1/ 1/ 41	1,0	SEALING RING	WZ.NR 6/2823		
1/ 1/ 42	1,0	OTHER ACCESSORIES	PF 6180		
1/ 1/ 43	1,0	NUT	8X0,4		
1/ 1/ 51	1,0	CYLINDER ROLLER BEARING	AD383,420V-4.27-L 43		
1/ 1/ 53	1,0	BALL BEARING	170X260X42		DIN 625
1/ 1/ 60	1,0	CIR CLIP	200,00X---,--X 4,00		DIN 471
1/ 1/ 61	1,0	CIR CLIP	170,00X---,--X 4,00		DIN 471
1/ 1/ 62	1,0	CIR CLIP	---,--X260,00X 5,00		DIN 472
1/ 1/454	1,0	SHAFT SEALING RING	40X 80X10	BA NBR	DIN3760
1/ 1/462	4,0	PLUG	M 30X 1,5	ZN	DIN 908
1/ 1/463	4,0	SEALING RING	A 30X 36X2,0		DIN7603
1/ 1/491	1,0	WASHER			
1/ 1/520	2,0	OIL VALVE	HUB 3,5--1008050100		
1/ 1/521	2,0	SEALING RING	A 18X 22X1,5		DIN7603
1/ 11	1,0	PLANETARY STAGE			
1/ 11/ 1	1,0	INTERNAL-WHEEL			
1/ 11/ 3	1,0	SUN WHEEL			
1/ 21	1,0	PLANETARY STAGE			
1/ 21/ 1	1,0	INTERNAL-WHEEL			
1/ 21/ 3	1,0	SUN WHEEL			
1/ 24	1,0	PLANETARY CARRIER COMPLETE			
1/ 24/ 1	1,0	PLANETARY CARRIER			
1/ 24/ 3	1,0	CIR CLIP	100,00X---,--X 3,00		DIN 471
1/ 24/ 4	1,0	CIR CLIP	100,00X---,--X 2,50		
1/ 27	1,0	INTERMEDIATE HOUSING			
1/ 27/ 1	1,0	INTERMEDIATE HOUSING			
1/ 27/ 2	18,0	HEXAGON BOLT	M 16X110	ZN 8.8	DIN 931
1/ 31	1,0	PLANETARY STAGE			
1/ 31/ 1	1,0	INTERNAL-WHEEL			
1/ 31/ 3	1,0	SUN WHEEL			

NOTE!
When ordering spare parts,
or in any correspondance relating to the gearbox,
the number stamped on the gearbox nameplate
must be quoted.

POS-NO.	QTY	DESCRIPTION - ENGLISH	TECHNICAL - DATA	
1/ 34	1,0	PLANETARY CARRIER COMPLETE		
1/ 34/ 1	1,0	PLANETARY CARRIER		
1/ 34/ 3	1,0	CIR CLIP	70,00X---,--X 2,50	DIN 471
1/ 39	1,0	COVER		
1/ 39/ 1	1,0	COVER		
1/ 39/ 11	18,0	CYLINDRICAL SCREW	M 12X 75 ZN 8.8	DIN 912
1/ 39/ 21	1,0	BALL BEARING	20X 52X15	DIN 625
24	1,0	DRIVE CPL.		
24/ 1	1,0	BRAKE FLANGE		
24/ 4	1,0	DRIVING SLEEVE		
24/ 7	1,0	MOTOR FLANGE		
24/ 8	1,0	MOTOR FLANGE		
24/ 18	1,0	COVER		
24/ 20	8,0	CYLINDRICAL SCREW	M 12X 40 ZN 8.8	DIN 912
24/ 22	12,0	CYLINDRICAL SCREW	M 12X140 ZN 8.8	DIN 912
24/ 23	8,0	CYLINDRICAL SCREW	M 12X 50 ZN 8.8	DIN 912
24/ 25	4,0	HEXAGON BOLT	M 20X 30 ZN 8.8	DIN 933
24/ 30	1,0	BALL BEARING	80X125X22	DIN 625
24/ 40	1,0	CIR CLIP	---,--X125,00X 4,00	DIN 472
24/ 41	1,0	CIR CLIP	80,00X---,--X 2,50	DIN 471
24/ 43	2,0	CIR CLIP	---,--X 36,00X 1,50	DIN 472
24/ 50	1,0	SHAFT SEALING RING	90X120X12 BA FPM	DIN3760
24/ 53	1,0	SHAFT SEALING RING	110X130X 8 B1 FPM	DIN3760
24/ 55	1,0	SEALING RING	174,00X4 NBR-70	
24/ 58	1,0	SEALING RING	235,00X3 NBR-70	
24/ 59	1,0	SEALING RING	200,00X3 NBR-70	
24/ 60	4,0	PLUG	M 10X 1,0 ZN	DIN 910
24/ 61	4,0	SEALING RING	A 10X 13,5X1,0	DIN7603
24/ 64	1,0	PLUG	M 18X 1,5 ZN	DIN 910
24/ 65	1,0	SEALING RING	A 18X 22X1,5	DIN7603
24/ 66	1,0	COVER		
24/ 69	1,0	VENT FILTER	0,02-0,07BAR-EL 4,7	M10*1,0
24/ 70	10,0	WASHER	25,00X 35,00X 1,00	DIN 988
24/ 75	14,0	SPRINGS	15,7N/MM-S= 27,3-RE	
24/ 76	14,0	SPRINGS	5,9N/MM-S= 33,0-LI	
24/ 79	4,0	WASHER	21,00X 37,00X 3,00	DIN 125
24/ 95	1,0	HYDR.-PART FOR DISC BRAKE	+ 2*O-RING=ST=L 48,0	
24/ 96	1,0	CLUTCH PLATE CARRIER		
24/ 97	11,0	MULTIPLE DISK	DIN 867RAD-NUT-L2,30	
24/ 98	10,0	MULTIPLE DISK	DIN 867--------L2,20	
24/122	1,0	PLUG	M 12X 1,5 ZN	DIN 908
24/123	1,0	SEALING RING	A 12X 16X1,5	DIN7603

NOTE!
When ordering spare parts,
or in any correspondance relating to the gearbox,
the number stamped on the gearbox nameplate
must be quoted.

POS-NO.	QTY	DESCRIPTION - ENGLISH	TECHNICAL - DATA	
60	1,0	OIL PIPE		
60/ 1	1,0	SEALING RING	A 22X 27X1,5	DIN7603
60/ 2	1,0	PIPING PIECES		
60/ 3	1,0	THREADED JOINT CONNECTION	DIN 7643-A20/RD 22	
60/ 4	1,0	THREADED JOINT CONNECTION	D26-----DIN7642--07.	
60/ 5	2,0	SEALING RING	A 26X 31X2,0	DIN7603
60/ 6	1,0	HYDR.-PARTS	A=26,0 I=19,0	
60/ 11	1,0	THREADED JOINT CONNECTION	I 3/4"	C 1
60/ 12	1,0	THREADED JOINT CONNECTION	-OMD-R3/4"- -160B	
60/ 13	1,0	THREADED JOINT CONNECTION	M30*2,0- 0 GRAD--GA	
60/ 14	1,0	THREADED JOINT CONNECTION	RI3/4"X1/2"--400B	
60/ 15	1,0	SEALING RING	A 21X 26X1,5	DIN7603
60/ 16	1,0	PLUG	G 1/2 ZN	DIN 910
60/ 19	1,0	PLUG	G 3/4 ZN	DIN 910
60/ 31	1,0	PIPING PIECES		
60/ 32	2,0	CLAMP	4R3/4	RAP-
60/ 33	4,0	CYLINDRICAL SCREW	M 6X 40 ZN 8.8	DIN 912
60/ 41	1,0	SEALING RING	A 22X 27X1,5	DIN7603
60/ 42	1,0	PIPING PIECES		
60/ 43	1,0	THREADED JOINT CONNECTION	DIN 7643-A20/RD 15	
60/ 44	1,0	THREADED JOINT CONNECTION	D18-----DIN7642--07.	
60/ 45	2,0	SEALING RING	A 18X 22X1,5	DIN7603
60/ 46	1,0	HYDR.-PARTS	A=19,0 I=12,7	
60/ 47	1,0	THREADED JOINT CONNECTION	M22*1,5- 0 GRAD--GA	
60/ 48	1,0	THREADED JOINT CONNECTION	-OMD-G1/2"- -250B	
60/ 49	1,0	THREADED JOINT CONNECTION	I 3/4"-I 1/2"-A 3/4"	
60/ 61	1,0	PIPING PIECES		
60/ 62	1,0	SEALING RING	A 27X 32X2,0	DIN7603
60/ 63	1,0	OIL DIPSTICK	0,20B/MM-------L 450	

*** END OF PART LIST

NOTE!
When ordering spare parts,
or in any correspondance relating to the gearbox,
the number stamped on the gearbox nameplate
must be quoted.

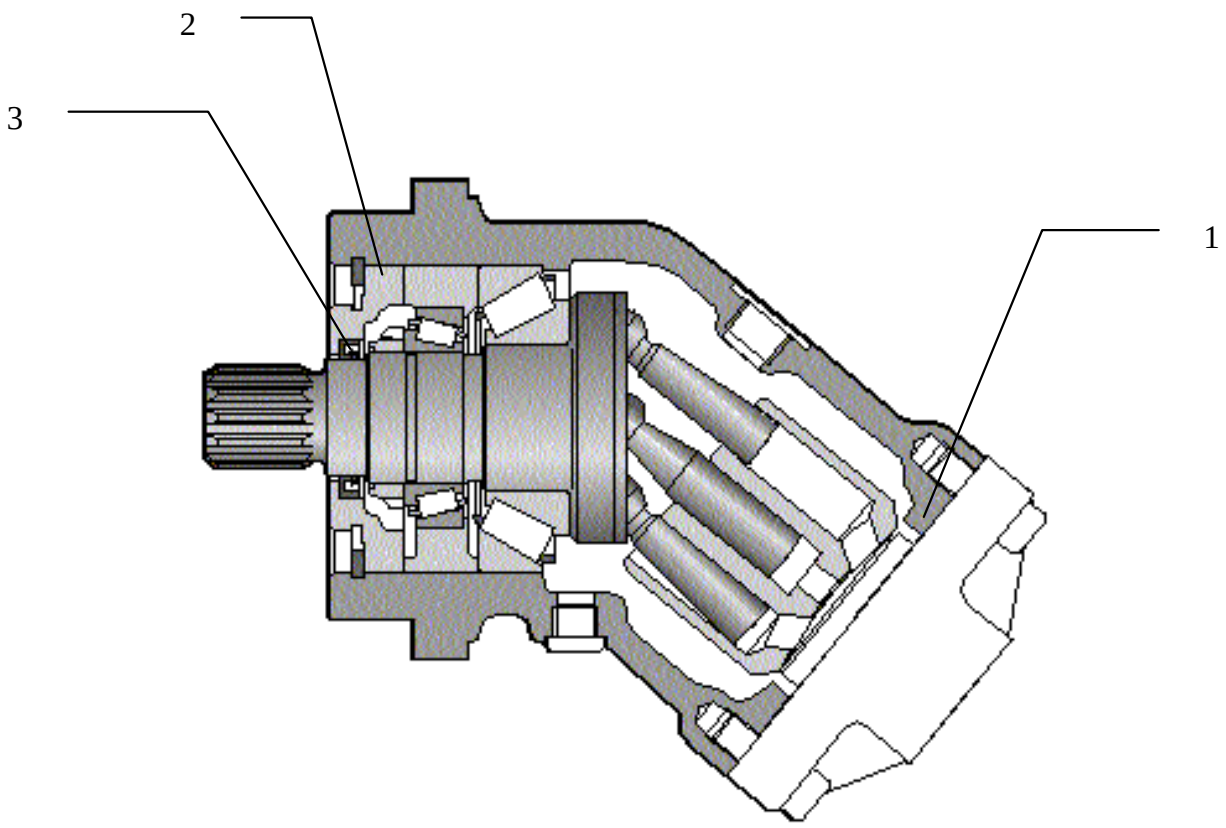

SEAL KIT CONSISTING OF GASKET POS. 1-2-3.

NOTE! REPLACEMENT PARTS IN THE MOTOR CAN NOT BE SUPPLIED.

REV	ALTERATION	SIGN / DATE
1	RELEASED FOR PRODUCTION	JHE–07.04.00

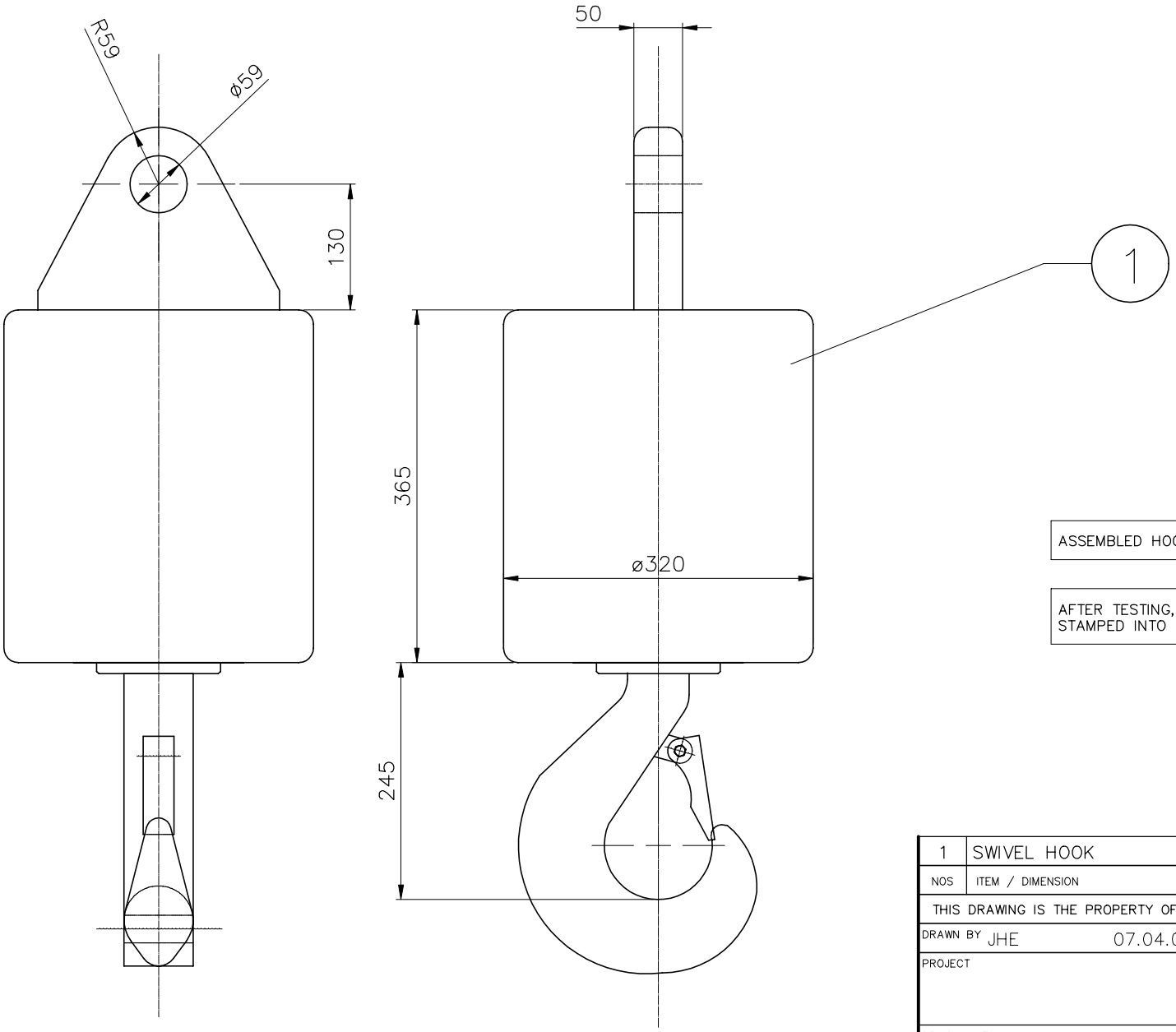

ASSEMBLED HOOK BLOCK TO BE TESTLOADED WITH 25T IN HOOK

AFTER TESTING, AND BEFORE FINAL PAINTING, THE TEST CERT. No HAS TO BE STAMPED INTO THE BLOCK WITH 10mm HIGH LETTERS

TOTAL WEIGHT, APPROX. ~ 250 Kg.

NOS	ITEM / DIMENSION	POS	MATR / DRWG / ART NO	WEIGHT
1	SWIVEL HOOK SWL=10T	1	5P DIN15401	250

THIS DRAWING IS THE PROPERTY OF TTS–NORLIFT % AND MUST NOT BE REPRODUCED WITHOUT OUR WRITTEN CONSENT

DRAWN BY JHE 07.04.00 | CHECKED BY | APPR BY

PROJECT

TTS - Norlift AS
MARINE CARGO GEAR

DRWG NAME
ASSEMBLY SWIVEL HOOK 10T

SCALE 1:5 | E

DRWG NO A3–9407 REV 1

MASTER DRWG | REPLACED BY | REPLACES

REV	ALTERATION	DATE / SIGN
1	RELEASED FOR PRODUCTION	JHE–25.02.00

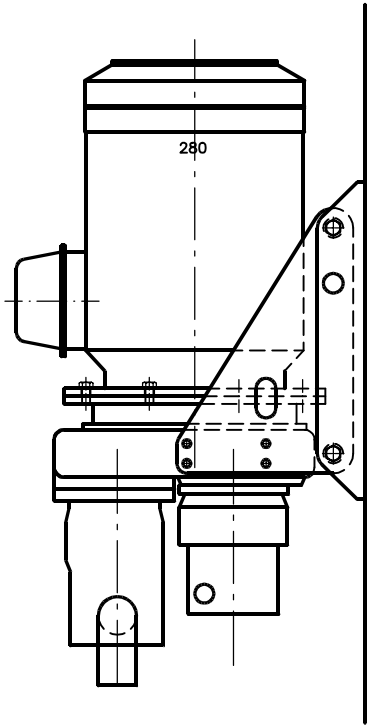

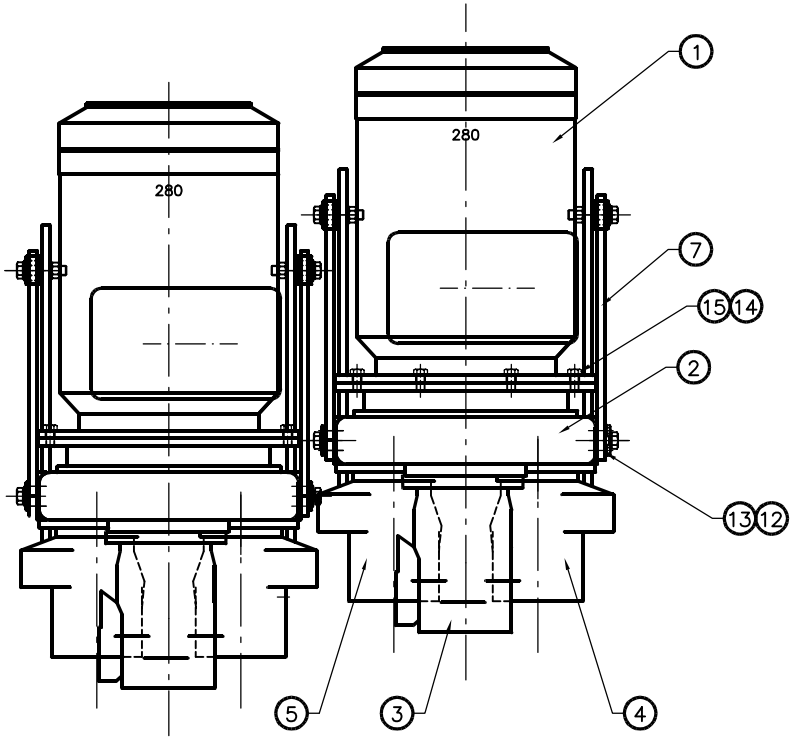

TOTAL WEIGHT APPROX. [KG] ~2500

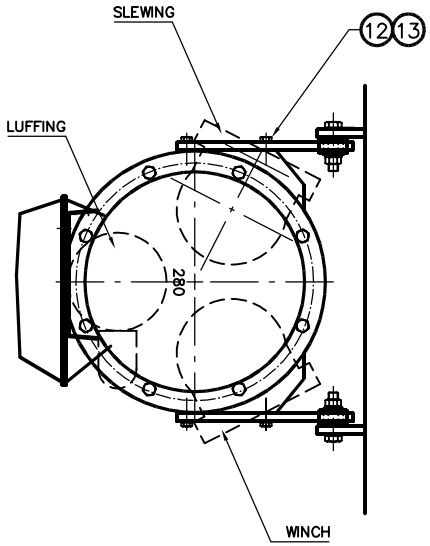

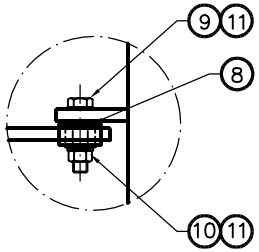

NOS	ITEM / DIMENSION		POS	MATR / DRWG / ART NO	WEIGHT
8	HEX SCREW DIN 933	M20x40	15	8.8 ELZN	–
8	WASHER DIN 125	ø21/37x4	14	ELZN	–
24	HEX SCREW DIN 933	M16x45	13	8.8 ELZN	–
24	WASHER DIN125	ø17/30x3	12	ELZN	–
16	WASHER DIN 125	ø25/44x4	11	ELZN	–
8	NYLOCK NUT	M24	10	8 ELZN	–
8	HEX SCREW DIN 931	M24x110	9	8.8 ELZN	–
8	RUBBER SUSPENSION	VP 25/5045	8		4
4	PUMP BRACKET		7	A3–9294	120
			6		
2	PUMP SLEW	Item 301	5	Hydr. circuit	160
2	PUMP WINCH	Item 101	4	Hydr. circuit	160
2	PUMP CYLINDER	Item 201	3	Hydr. circuit	200
2	SPREADER GEAR	Item 701	2	Hydr. circuit	400
2	EL MOTOR	–M1,–M2	1	A4–9314	1500

THIS DRAWING IS THE PROPERTY OF TTS NORLIFT % AND MUST NOT BE REPRODUCED WITHOUT OUR WRITTEN CONSENT

DRAWN BY JHE 25.02.00 | CHECKED BY | APPR BY

PROJECT: PUMP DRIVE

DRWG NAME: MAIN ASSEMBLY

TTS - Norlift AS
MARINE CARGO GEAR

SCALE 1:10 | E

DRWG NO A2–7707 – 1 REV

MASTER DRWG | REPLACED BY | REPLACES

1. Foreword....1
2. Prescribed Use....1
3. Transport and Storage....2
4. Set-up and putting into operation....2
5. Conversions and modifications....3
6. Notes on maintenance....3
7. Spare parts and repairs....4

1. Foreword

These operation instruction contain important advice on the safe, correct and economic operation of the gear and plant.

Following this advice helps to prevent hazards and damage, reduce repair costs and breakdown times and to increase the reliability and service life of the gear.

Important: Always read information marked with this **!** symbol. Such information warns of danger. Non-observance can lead to personal injury and damage to property.

Advice: The content of these operation instructions are protected by copyright. Illustrations, drawings and data from these operation instructions may be neither reproduced nor communicated or made available to third parties or competing companies (Para. 48 of the copyright law of 11th June 1870).

2. Prescribed Use

The above-mentioned product is intended for installation in a machine. It may not be commissioned until it has been ascertained that the machine in which the above mentioned product is to be installed complies with the conditions of the EC guideline on machinery.

The product may only be used for the technically designed purpose agreed. The product may not be operated with outputs, torque's or external loads which exceed the structural design.

Installation and commissioning may only be carried out by properly qualified personnel.

Any applicable national, local and plant-specific conditions and requirements concerning the prevention of accidents must be observed.

Qualified personnel are those persons, who, on the basis of their training, experience and instruction, along with their knowledge of relevant standards, conditions, regulations for the prevention of accidents and operating conditions, have been authorized by the person responsible for the safety of the plant to carry out the necessary activities and in so doing are able to detect and prevent possible hazards.

3. Transport and Storage

! **Transport**
For risk-free handling, the hoisting lugs and pegs or threaded bore-holes provided must be used. Hoisting lugs and similar aids attached to the gears are designed only for the weight of the gears and may not be used for raising extension components such as motors, drum shaft or similar.
Only use suitable and technically faultless lifting equipment and load suspension device (e.g. ropes, eye bolts etc.) with sufficient load bearing capacity. See indication of weight in the technical data or on the type plate. The indications of weight must be regarded as approximate as weights can vary slightly, e.g. by different oil levels.
Do not remain or work under suspended loads.
Storage
Storage from delivery to commissioning should be in dry, dust free and vibration-free.
Inquiries should be addressed to the manufacturer in the case of differing storage conditions.
Protection against Corrosion
The standard preservation of the shaft, hollow shafts etc. is effective for one year maximum under above mentioned conditions. It is not suitable for outside storage.

4. Set-up and putting into operation

Assembly and commissioning may only be carried out by suitable qualified personnel.

! Before commissioning and the test run it must be insured that the moving and rotating components (e.g. shafts, coupling etc.) do not represent a hazard. This means that the necessary contact protection must be provided or measures taken to ensure a safe distance from the machinery, the keys in the shaft ends are to be secured against being spun out.

! Before work on the gear unit or attached equipment is performed, the power supply must be disconnected. Action must be taken to prevent the power being inadvertently switched on again. Where necessary, mechanical device (special equipment, support etc.) must ensure that the machine cannot move or rotate.

! It must be insured before commissioning that the specified amount of lubricant has been poured into the machine. For the oil quantity and oil grade, see nameplate or operation manual. Check the oil level by undoing the overflow screw or by using the oil dipstick or oil sight glass if these devices are fitted.

! Never operate without a breather filter otherwise the excess pressure resulting from the gear unit heating up will cause oil leak.

! After prolonged operation the lubricant and gear unit surface may reach temperatures which could cause skin burns.

! Oil mist is produced in the gear units. It is therefore dangerous to work with a naked flame near a gear unit openings. There is a risk of fire or explosion.

! High-speed machines into which these gear units are installed may generate loud noises which can damage your hearing if they persist. In this case the operating staff should be provided with ear protection. In order to reduce the noise, all technical possibilities should be used to observe the statutory regulations.

! It must be ensured that the gear unit are not continuously subjected to severe vibrations, e.g. from low-speed diesel engines.

Technical information

Housings: Torsion ally rigid housings made of aluminium or grey cast iron.

Gearing: Casehardened, tooth flanks ground

Lubrication: Splash lubrication, pressurized circulation lubrication.

Assembly of the gear units
Before assembly, check the surfaces, edges of the shaft end, keys and external shaft splines for damage, and remedy and damage discovered.
In the case of key and splined shaft connections apply lubricating paste (e.g. Optimol White T) to the shaft end. The paste facilitates assembly of the units and prevents corrosion which would make subsequent dismantling much more difficult. It must be ensured that the shaft seals are not dirty, damaged or coated with paint. When the units are being painted, cover the seals and running surfaces of the shaft or protect with grease. This is the only way to prevent damage and thus oil losses.
Oil baffle plates which may be installed on the pump mounting flanges must not be damaged or dismantled.
Assembly of input and output elements
Coupling, belt pulleys or similar elements should be mounted with the appropriate jigs (threaded spindle which is screwed into the centering bore of the shaft). Severe hammering must be avoided as antifriction bearings. retaining rings and other internals would be damaged!
Hydraulic pumps must be connected with the mounting flanges so that they are oil-tight and must not exert any axial pressure on the gear unit shafts! The coupling elements and the splines must be adequately lubricated before assembly; we recommend Optimol White T or Staburags NBU 30 PTM.
Exception: Splined hollow shafts which have their own oil filling from the gear unit lubrication system; the relevant mounting flange is then provided with screw plugs for the oil level and oil drain as well as a breather. In these cases the oil level as well as the oil quantity required too fill the gear unit flange is entered in the assembly drawing.
Lubricants
The gear unit are as a rule supplied without oil; they are then provided with a label ”Caution! Not filled with oil!” Normally gear oil CLP220 to DIN 51517 (mineral oil) or PGLP 220 to DIN 51502 (synthetic oil) is used. These grades are suitable for normal operating conditions at an ambient temperature of -5º to +35ºC or -25º to +80ºC with synthetic oil. Consult the manufacturer in the event of special operating and application conditions.
Commissioning
Before commissioning, the gear units and, if necessary, the mounting flanges must be properly filled with oil; for the oil grade and oil level, refer to the technical data or the nameplate and assembly drawing.

5. Conversions and modifications

Do not make any changes, provide attachments or perform conversion work on the gear unit or components which could reduce safety without the manufacturer’s permission in particular and protective facilities provided (e.g. covers, overload protection) must not be removed or changed.

6. Notes on maintenance

Change oil regularly in accordance with the operation manual.
Refer to lubrication chart, pump power take-off gear units. If the mounting flanges have their own oil filling, it is designed as long-life lubrication and no oil change is necessary. For the oil quantity and oil grade, see nameplate or operating manual; the oil quantities are to be regarded as approximations. The oil level indicate in the assembly drawings is always decisive. Check the oil level by undoing the overflow screw or by using the oil dipstick provided these devices are part of the fittings. at each oil change check all the seals and screws. If possible, a visual leak check should be made every day. A rise in the oil level in the gear unit or mounting flanges with their own oil filling is a sign or defective seals in the hydraulic units.

Premature gear unit failure may occur as a result of running dry cause by oil loss, the ingress of water into the gear unit housing or the presence of foreign matter in the lubricant.

! It must when changing, replenishing or draining the oil or when taking oil samples, it must be guaranteed that no oil can escape onto the ground or surface water or enter the sewage system.

! Prolonged contact with lubricants can cause injury to your skin. Use a protective skin ointment.

! It must after prolonged operation the lubricant and surface of the gear unit may reach temperatures which can cause skin burns. When working on hot components, wear protective clothing, e.g. protective gloves.

The lubricant is best drained while still warm from operation so that a complete change of the old lubricant is ensured. If the oil is highly contaminated, the gear unit should be rinsed with the same lubricant.

! Under no circumstances may different types of lubricant, such as mineral oil, synthetic oil or grease, be mixed with each other.

! The applicable national, local and plant-specific regulations and requirements concerning accident prevention and environmental protection are to be observed.

! To prevent faults, it is necessary to carry out the regular maintenance and inspection work prescribed. Any changes compared with normal operation (higher power input, temperatures or vibrations, unusual noises or smells, response of monitoring devices etc.) are in indication that the unit is not functioning properly. To avoid faults which could results in injury to people or damage to property, the maintenance staff responsible must be notified immediately.
In case of doubt switch off the relevant item of equipment and ensure it cannot be switched on again.

! To prevent damage from overheating, dirt and dust deposits should be regularly removed from the gear unit surface.

7. Spare parts and repairs

Spare parts must satisfy the technical requirements specified by the manufacturer. This is always guaranteed with original spare parts. When ordering spare parts, the type number and serial number (to be found on the nameplate or in the technical data) in addition to spare parts number must be indicated. Spare parts drawings and spare parts list can be requested from the manufacturer.

Repairs and overhauls are carried out by the manufacturer at short notice. When carrying out your own repairs, make sure that the expendable and auxiliary materials and parts which have been replaced are disposed of safely and without polluting the environment.

! The applicable national, local and plant-specific regulations and requirements concerning accident prevention and environmental protection are to be observed. The manufacturer does not assume and liability for damage caused by improper repair work or the use of non-original spare parts.

! Prolonged contact with lubricants can cause skin damage. Use a protective skin ointment.
After prolonged operation the lubricant and the surface of the gear unit may reach temperatures which can cause skin burns. Before starting repairs, let the gear unit cool down.

Item 701, Hydraulic Circuit

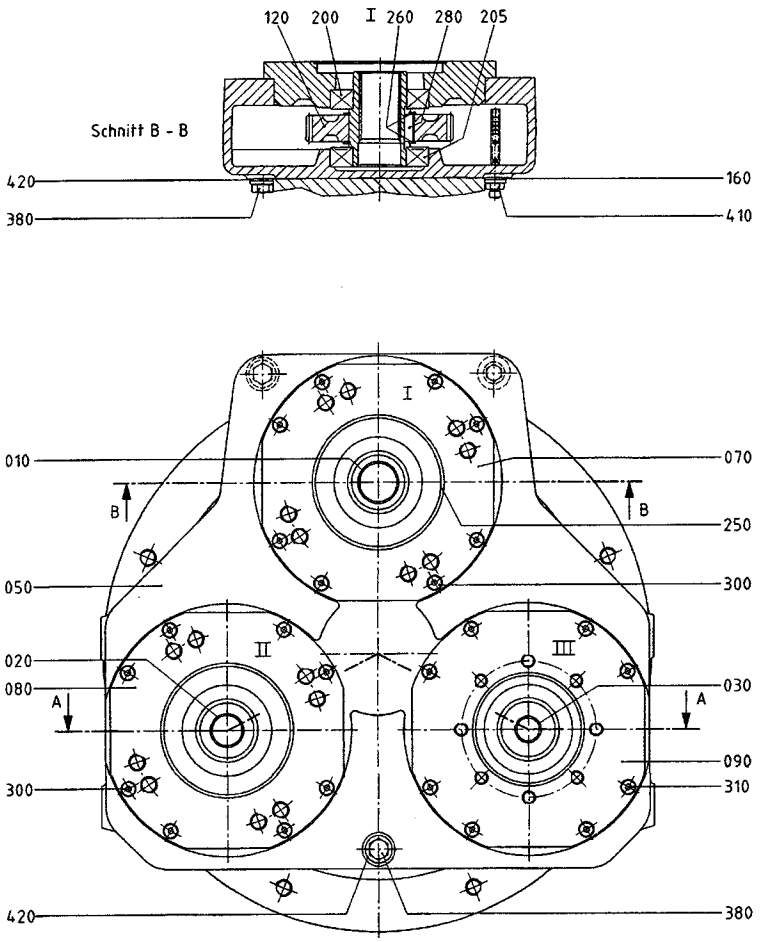

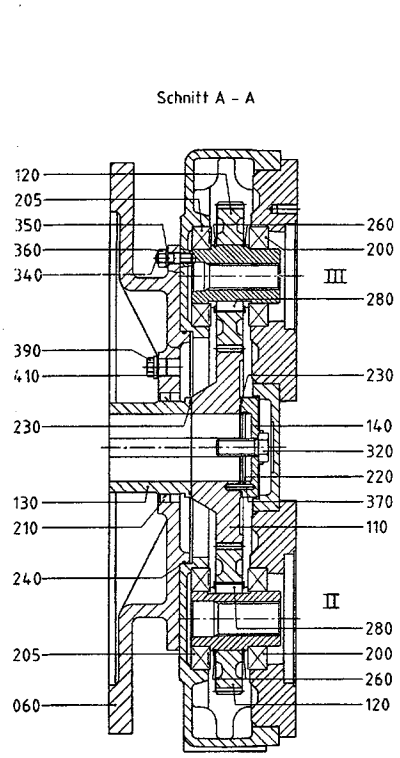

Item	Qty.	Description	Item	Qty.	Description
10	1	Shaft	230	2	O-ring
20	1	Shaft	240	1	O-ring
30	1	Shaft	260	6	Seeger ring
50	1	Housing	280	6	Key
60	1	Flange	300	16	Unbraco screw
70	1	Flange	310	8	Unbraco screw
80	1	Flange	320	1	Screw
90	1	Flange	340	15	Screw
110	1	Gear wheel	350	15	Washer
120	3	Gear wheel	360	15	Nut
130	1	Ring	370	1	Dowel pin
140	1	Lock washer	380	2	Plug
160	1	Oil level stick	390	1	Plug
200	3	Ball bearing	410	2	Seal
205	3	Ball bearing	420	2	Seal
210	1	Seal	470	7,5L	Gear oil
220	1	O-ring			

REV	ALTERATION	DATE / SIGN
1	RELEASED FOR PRODUCTION	LI 17.02.98

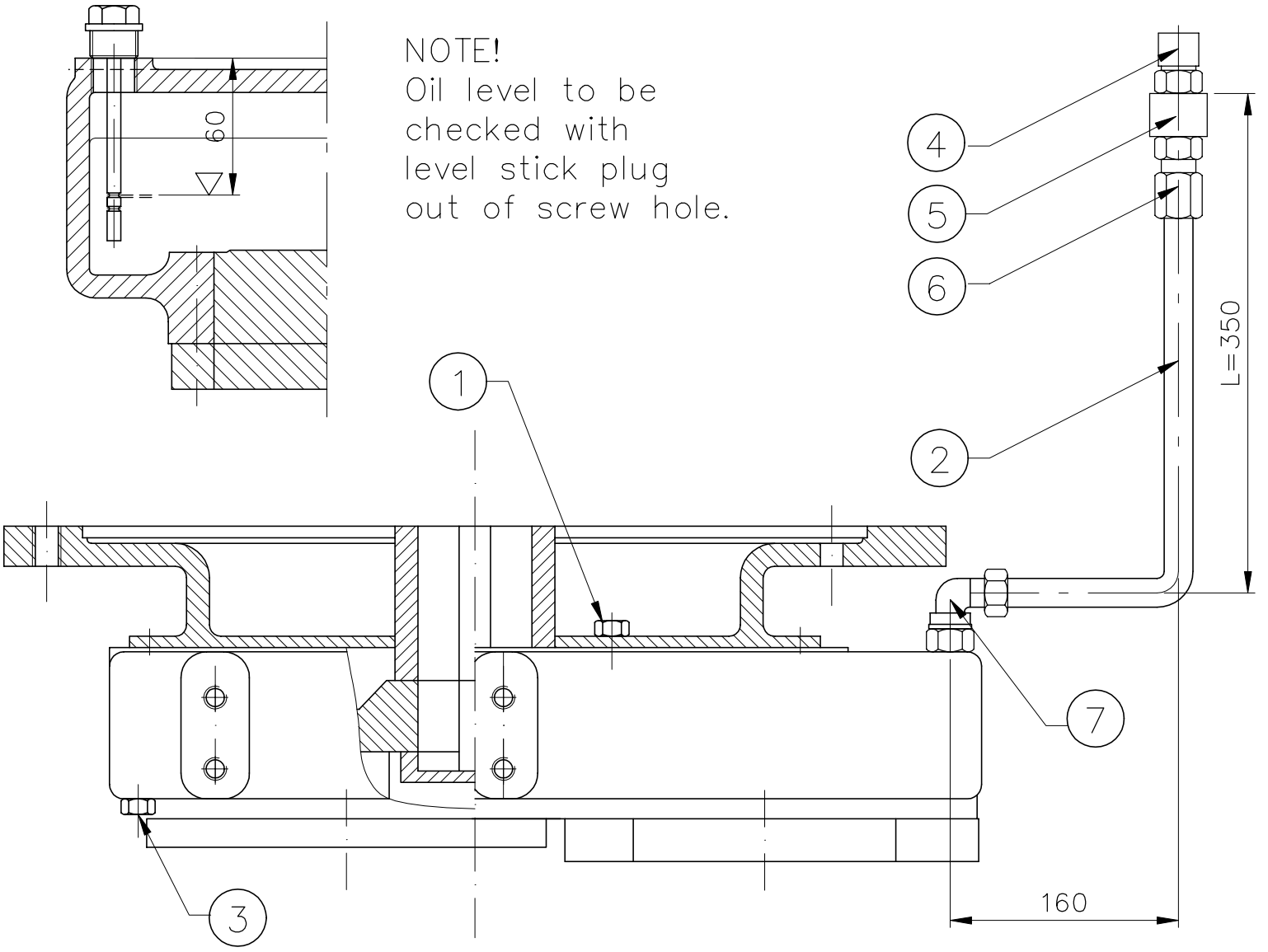

NOS	ITEM / DIMENSION		POS	MATR / DRWG / ART NO	WEIGHT
1	ELBOW 90°	C40XS20-12	7		
1	COUPLING	F40XS20-08	6		
1	MUFFE	111-08-08	5		
1	BREATHER	1/2"	4		
1	PLUG	3/4"	3		
1	BREATHER PIPE	ø20	2		
1	PLUG	1/2"	1		

THIS DRAWING IS THE PROPERTY OF TTS-NORLIFT % AND MUST NOT BE REPRODUCED WITHOUT OUR WRITTEN CONSENT

DRAWN BY L.ls. 17.02.98	CHECKED BY	APPR BY
PROJECT: SPREADER GEAR	TTS - Norlift AS MARINE CARGO GEAR	
DRWG NAME: OIL LEVEL	SCALE 1:5	E
	DRWG NO A4-7100 REV 1	
MASTER DRWG	REPLACED BY	REPLACES

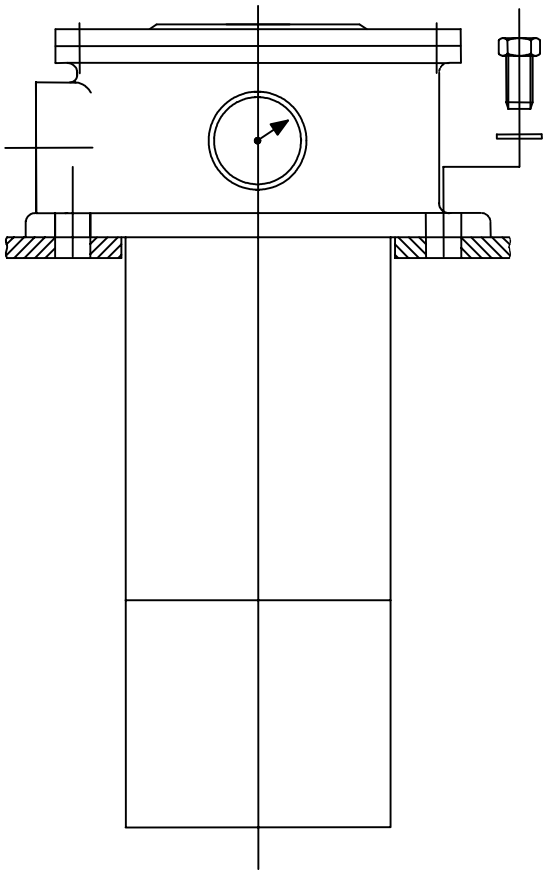

POS	DESCRIPTION
1	COMPLETE FILTER
2	FILTER ELEMENT

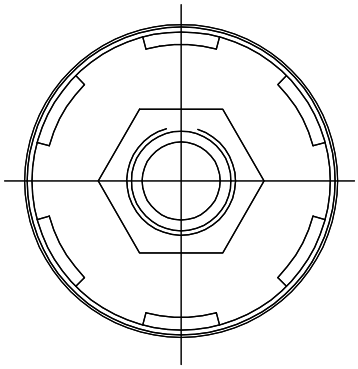

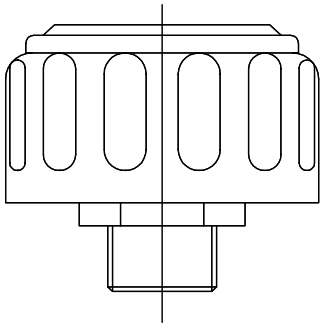

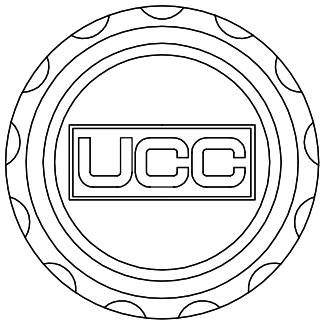
UCC

TTS - Norlift	TEMP / LEVEL INDICATOR	905
LI / 25.02.99		Page 1 of 1

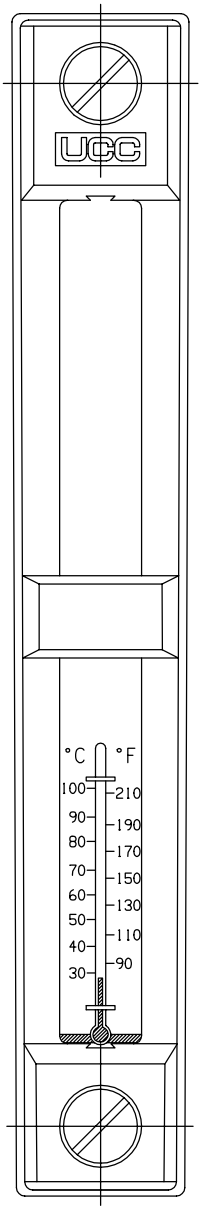

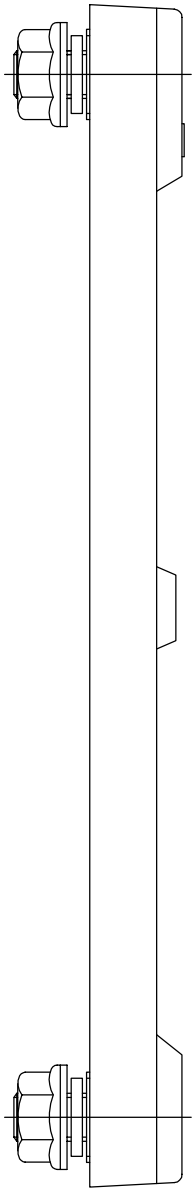

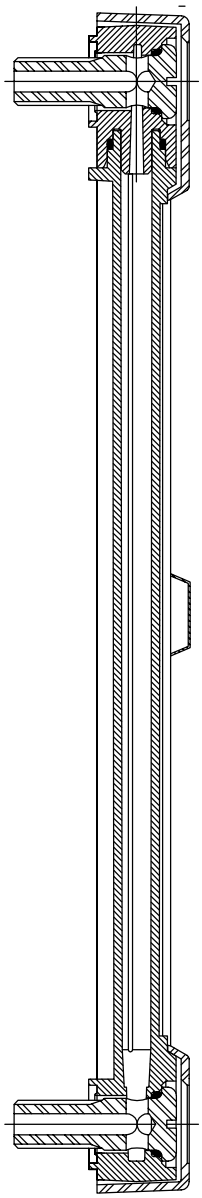

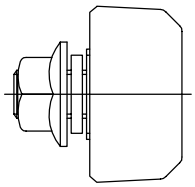

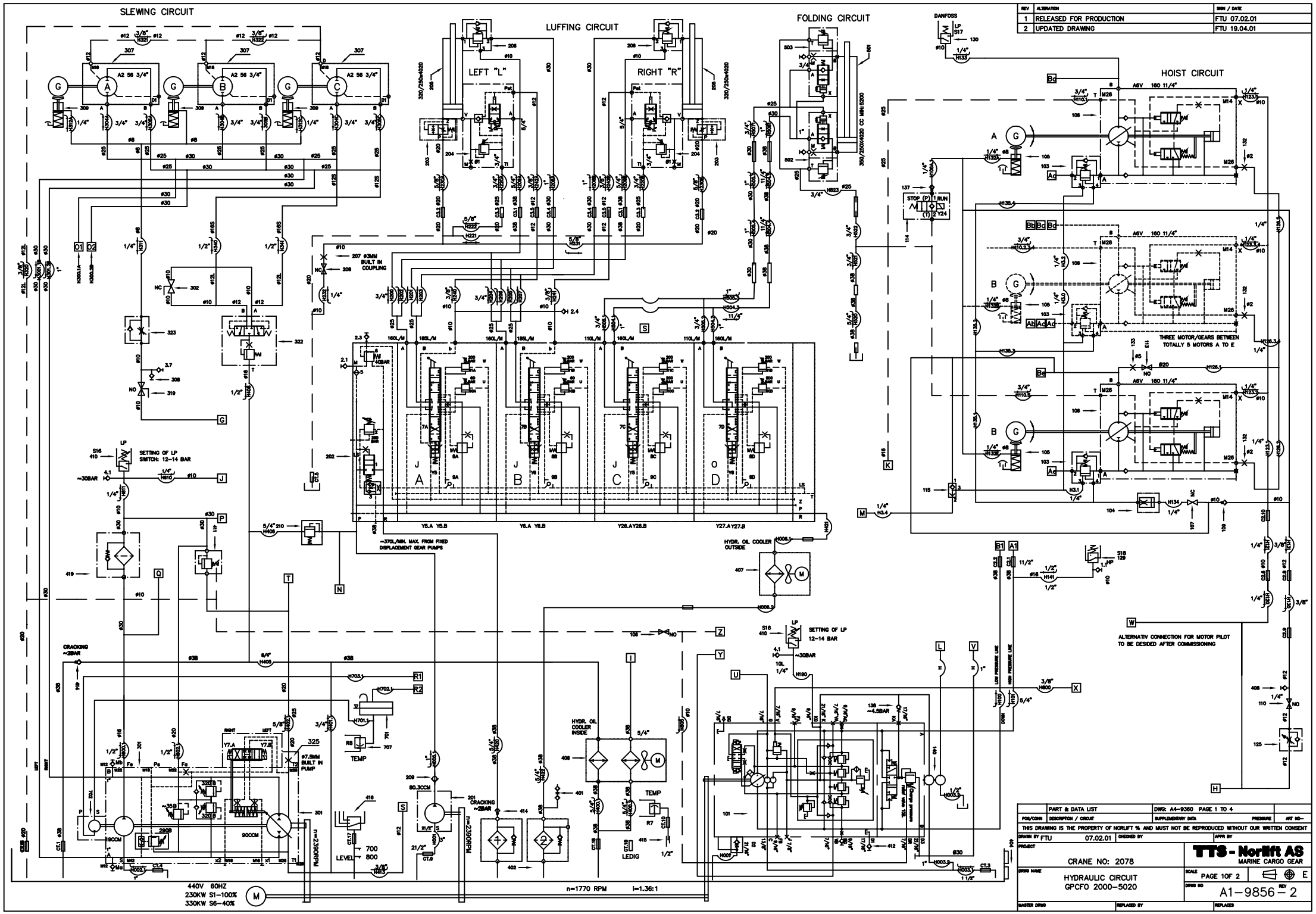

REV	ALTERATION	SIGN / DATE
1	RELEASED FOR PRODUCTION	FTU 07.02.01
2	UPDATED DRAWING	FTU 19.04.01

PART & DATA LIST — DWG: A4-9360 PAGE 1 TO 4

POS/CONN | DESCRIPTION / CIRCUIT | SUPPLEMENTARY DATA | PRESSURE | ART NO—

THIS DRAWING IS THE PROPERTY OF NORLIFT % AND MUST NOT BE REPRODUCED WITHOUT OUR WRITTEN CONSENT

DRAWN BY FTU 07.02.01 | CHECKED BY | APPR BY

PROJECT: CRANE NO: 2078

DRWG NAME: HYDRAULIC CIRCUIT GPCFO 2000-5020

TTS - Norlift AS
MARINE CARGO GEAR

SCALE: PAGE 10F 2 | E

DRWG NO: A1-9856 — 2 | REV

MASTER DRWG | REPLACED BY | REPLACES

REV	ALTERATION	SIGN / DATE
1	RELEASED FOR PRODUCTION	FTU 07.02.01
2	UPDATED DRAWING	FTU 19.04.01

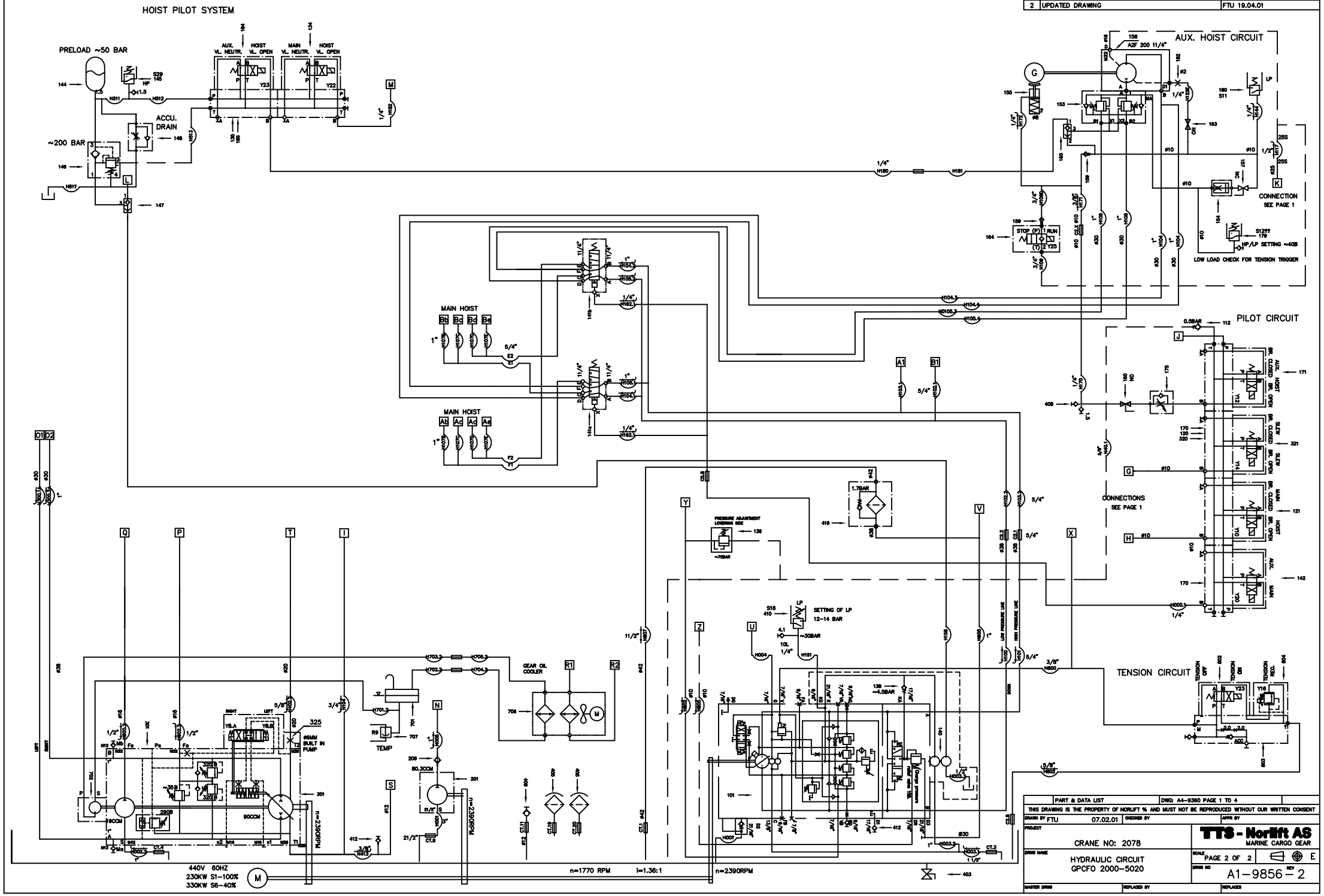

PART & DATA LIST	DWG: A4-9360 PAGE 1 TO 4

THIS DRAWING IS THE PROPERTY OF NORLIFT % AND MUST NOT BE REPRODUCED WITHOUT OUR WRITTEN CONSENT

DRAWN BY FTU 07.02.01 | CHECKED BY | APPR BY

PROJECT: CRANE NO: 2078

TTS - Norlift AS
MARINE CARGO GEAR

DRWG NAME: HYDRAULIC CIRCUIT GPCFO 2000-5020

SCALE: PAGE 2 OF 2 | E

DRWG NO: A1-9856-2 | REV

MASTER DRWG | REPLACED BY | REPLACES

REV	ALTERATION	SIGN / DATE
1	RELEASED FOR PURCHASE/APPR.	FTU 07.02.01

POS/CONN	DESCRIPTION / CIRCUIT	SUPPLEMENTARY DATA	PRESSURE	ART NO
	HOISTING CIRCUITS (MAIN)			
101	2 OFF HOIST PUMP (COMMON)			
102				
103	5 OFF LOAD CONTROL VALVE			
104	FLOW VALVE			
105	4 OFF GEAR WITH BRAKE			
106	4 OFF HYDR. WINCH MOTOR(126/48CCM)			
107	SHUT OFF VALVE			
108	SHUT OFF VALVE			
109	CHECK VALVE			
110	SHUT OFF VALVE			
111	SHUTTLE VALVE			
112	CHECK VALVE 0.5 BAR CRACKING			
113	SHUT OFF VALVE			
114	EL. OPERATED 2/2 VALVE			
115	SHUTTLE VALVE			
120	MOUNTING BLOCK	COMMON AND SPECIFIED IN 320		
121	EL. OPERATED 4/2 VALVE			
125	THROTTLE/CHECK VALVE			
126				
129	PRESSURE SWITCH HP			
130	PRESSURE SWITCH LP			
132	5 OFF ORIFICE			
133	ORIFICE			
134	EL. OPERATED 4/2 VALVE			
135	MOUNTING BLOCK	COMMON AND SPECIFIED IN 185		
136	RELIEF VALVE			
137	CHECK VALVE			

DRAWN BY	CHECKED BY	APPR BY
FTU 07.02.01		

PROJECT
GPCFO 2000-5020
CRANE NO: 2078

TTS - Norlift AS
MARINE CARGO GEAR

DRWG NAME
PART & DATA LIST FOR
HYDRAULIC CIRCUIT
DWG NO A1-9856

SCALE
PAGE 1 OF 4

E

DRWG NO
A4-9360 REV 1

MASTER DRWG	REPLACED BY	REPLACES

REV	ALTERATION	SIGN / DATE
1	RELEASED FOR PURCHASE/APPR.	FTU 07.02.01

POS/CONN	DESCRIPTION / CIRCUIT	SUPPLEMENTARY DATA	PRESSURE	ART NO
	HOISTING CIRCUITS (PILOT)			
140	2 OFF FEED/PILOT PUMP			
141A+B	2 OFF DISTRIBUTOR VALVE			
142	EL. OPERATED 4/2 VALVE			
144	ACCUMULATOR ~5L CHARGE 50 BAR			
145	PRESSURE SWITCH HP			
146	ACC. UNLOADING VALVE			
147	SHUTTLE VALVE			
148	CHECK/THROTTLE/SHUT VALVE			
	AUXILIARY WINCH			
153	LOAD CONTROL BLOCK			
154	FLOW VALVE			
155	GEAR WITH BRAKE			
156	HYDR. WINCH MOTOR			
157	SHUT OFF VALVE			
159	CHECK VALVE			
160	SHUT OFF VALVE			
161	CHECK VALVE			
163	SHUT OFF VALVE			
164	EL. OPERATED 2/2 VALVE			
165	SHUTTLE VALVE			
170	MOUNTING BLOCK	COMMON AND SPECIFIED IN 320		
171	EL. OPERATED 4/2 VALVE			
175	THROTTLE/CHECK VALVE			
179	PRESSURE SWITCH HP/LP			
180	PRESSURE SWITCH LP			
182	ORIFICE			
184	EL. OPERATED 4/2 VALVE			
185	MOUNTING BLOCK NG6 DOUBLE			

DRAWN BY FTU 07.02.01	CHECKED BY	APPR BY
PROJECT GPCFO 2000–5020 CRANE NO: 2078	TTS - Norlift AS MARINE CARGO GEAR	
DRWG NAME PART & DATA LIST FOR HYDRAULIC CIRCUIT DWG NO A1–9856	SCALE PAGE 2 OF 4	E
	DRWG NO A4–9360	REV – 1
MASTER DRWG	REPLACED BY	REPLACES

REV	ALTERATION	SIGN / DATE
1	RELEASED FOR PURCHASE/APPR.	FTU 07.02.01

POS/CONN	DESCRIPTION / CIRCUIT	SUPPLEMENTARY DATA	PRESSURE	ART NO
	LUFFING CIRCUIT			
201	2 OFF PUMP, LUFFING			
202	MAIN VALVE LUFFING/FOLDING			
203	2 OFF PIPE RUPTURE VALVE			
204	2 OFF LOAD CONTROL VALVE			
205	2 OFF CYLINDER			
206	2 OFF LOAD CONTROL VALVE			
207	ORIFICE			
208	SHUT OFF VALVE			
209	2 OFF CHECK VALVE			
210	RELIEF VALVE (PUMP SHOCK)			
	SLEWING CIRCUIT			
301	2 OFF SLEWING PUMP			
302	SHUT OFF VALVE			
307	3OFF SLEWING MOTOR			
308	QUICK CONNECTOR MALE			
309	3 OFF SLEWING GEAR			
319	SHUT OFF VALVE			
320	MOUNTING PLATE NG6, 4 CET			
321	EL. OPER. 4/2 VALVE			
322	FLUSHING VALVE			
323	CHECK/THROTTLE VALVE			
325	ORIFICE			
	COMMON EQUIPMENT			
401	QUICK CONNECTOR COMPLETE			
402	2 OFF FILTER COMPLETE			
402	2 OFF FILTER ELEMENT			
403	BOTTOM VALVE			
404	2 OFF TEMP/ LEVEL INDICATOR			
405	2 OFF AIR FILTER/BREATHER			
406	OIL/AIR COOLER			

DRAWN BY FTU 07.02.01	CHECKED BY	APPR BY

PROJECT
GPCFO 2000–5020
CRANE NO: 2078

TTS - Norlift AS
MARINE CARGO GEAR

DRWG NAME
PART & DATA LIST FOR
HYDRAULIC CIRCUIT
DWG NO A1–9856

SCALE
PAGE 3 OF 4

E

DRWG NO
A4–9856 – 1
REV

MASTER DRWG	REPLACED BY	REPLACES

REV	ALTERATION	SIGN / DATE
1	RELEASED FOR PURCHASE/APPR.	FTU 07.02.01

POS/CONN	DESCRIPTION / CIRCUIT	SUPPLEMENTARY DATA	PRESSURE	ART NO
407	OIL/AIR COOLER			
408	2 OFF QUICK CONNECTOR MALE			
409	QUICK CONNECTOR MALE			
410	3 OFF PRESSURE SWITCH LP			
411	RELIEF VALVE			
412	QUICK CONNECTOR MALE			
414	2 OFF CHECK VALVE(CRACKING 2.0BAR)			
415	TEMP. SENSOR			
416	LEVEL SWITCH			
419	2 OFF PRESSURE FILTER (50 BAR)			
420	2 OFF FILTER ELEMENT FOR 419			
	FOLDING CIRCUIT			
501	FOLDING CYLINDER			
502	LOAD CONTROL VALVE			
503	LOAD CONTROL VALVE			
	SPREADER GEAR CIRCUIT			
701	2 OFF SPREADER GEAR			
702	2 OFF LUB OIL CIRC. PUMP			
706	GEAR OIL COOLER			
	TENSION CIRCUIT			
802	EL. OPERATED 4/2 VAL.			
803	MOUNTING BLOCK			
804	EL. PROP. PRESSURE VALVE			

DRAWN BY	CHECKED BY	APPR BY
FTU 07.02.01		

PROJECT
GPCFO 2000–5020
CRANE NO: 2078

TTS - Norlift AS
MARINE CARGO GEAR

DRWG NAME
PART & DATA LIST FOR
HYDRAULIC CIRCUIT
DWG NO A1–9856

SCALE PAGE 4 OF 4

E

DRWG NO A4–9856 REV – 1

MASTER DRWG	REPLACED BY	REPLACES

Spare parts list

for prop. directional spool valves type PSL, PSV and PSM size 5

Available assemblies

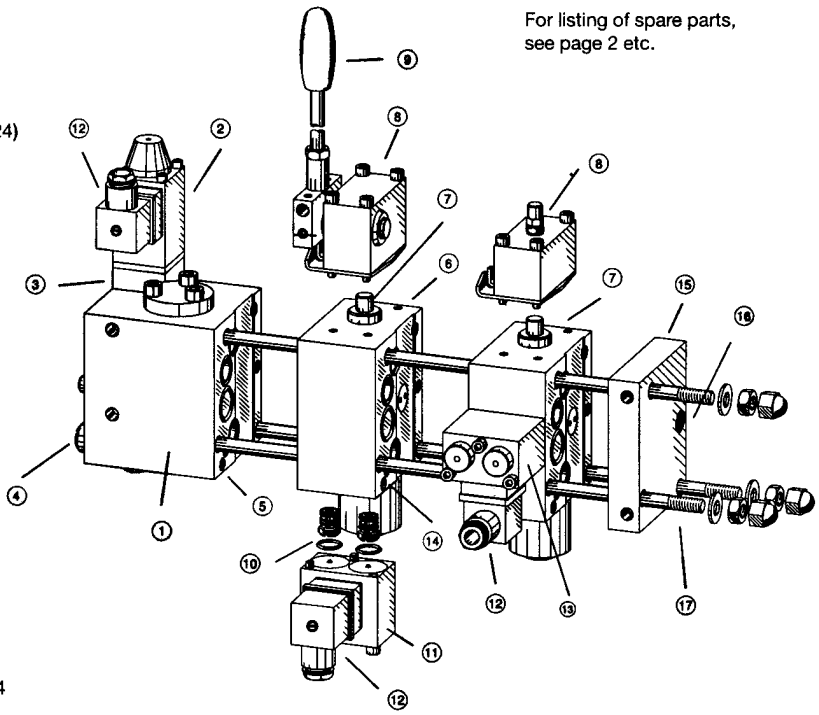

For listing of spare parts, see page 2 etc.

① Connection block (complete)
acc. to type plate or pamphlet
PSL(V)...-5-G12(24) [1])
PSM...-5-G12(24) [1]), (e. g.: PSL 4H1F/380-5-G24)

② Only for type PSL(V, M)...F(D)./...-5/..,
2/2-way directional seated valve
WN1F(D)-G12(24)

③ Second pressure stage
Sk 7470 104

④ Piloting pressure reducing valve coding 1 or 2
AM1-20 or AM1D-40

⑤ Seal kit for connection block
DS 7700-51

⑥ Valve section (complete with actuation)
acc. to type plate or pamphlet
SL5-.../.../...-G12(24) [2]),
e. g.: SL5-32 0 80/25 A200 B250 F3 X/EAS-G24

⑦ Spool acc. to type plate or pamphlet
SL5-.../...(e. g.: SL5-H 63/40)

⑧ (Hand lever) housing for actuation:

A, C, EA, PA
AS, CS, EAS
E
HA
HAS
H
P
PA

⑨ Hand lever for actuation
type A, C, EA, HA, PA (standard)

Hand lever
(Coding 2)

⑩ Prop. pressure reducing valve 2x PM1-11

⑪ Solenoid for actuation type:
E, EA...(standard)
(ex-proof)
ET, EAT
EB., EAB

⑫ Plug for solenoid:
MSD3-309 [3])

⑬ Solenoid for add. functions
Type F1, F2, F3
Type FP1, FP2, FP3

⑭ Seal kit for valve section

⑮ End plates or intermediate plate complete acc. to type plate or pamphlet:
SL5-E... (e. g.: SL5-E5, SL5-ZPL53)

⑯ Check valves type RC1 (D 6969 R) for typ:
SL5-E4, E5, E8, E9, E10, E15, E16

⑰ For tension rod set

1) Voltage specification G12 or G24 (12VDC or 24VDC) only required if a 2/2-way ② directional seated valve is mounted

2) Voltage specification G12, G24 or ex G24 (12VDC or 24VDC) only required for actuation E or EA and for functional cut-off, prop. pressure limiting valve type F1(2, 3), FP1(2, 3)

3) Scope of delivery with individual valves or solenoids

Please specify the complete order coding when ordering spare parts.
Subject to change without notice

Connection block **type PSL 5../..-5, type PSM 5../..-5**
type PSL 6../..-5, type PSM 6../..-5
type PSV 5../..-5
type PSV 6../..-5

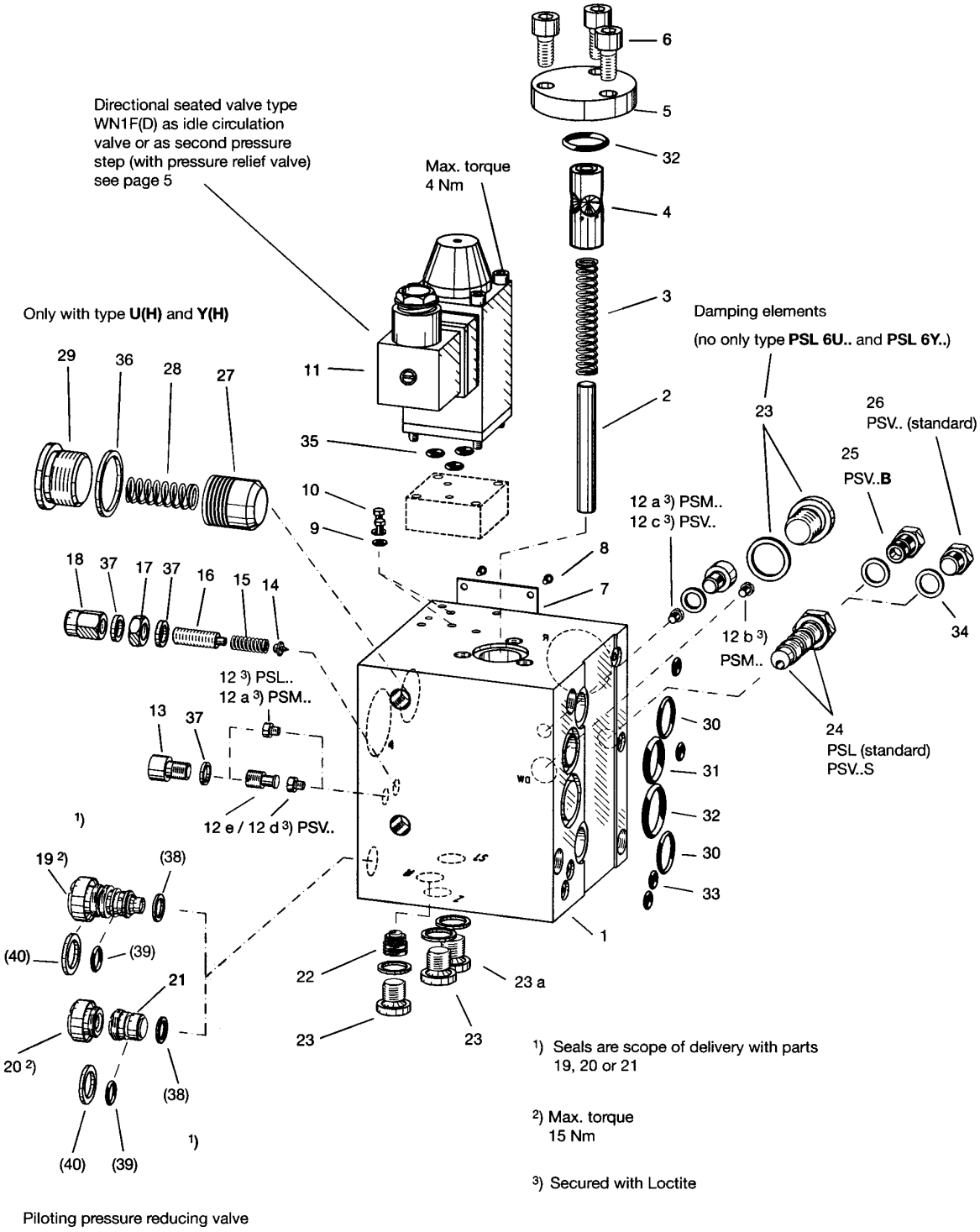

Please specify the complete order coding when ordering spare parts.
Subject to change without notice

Connection block type PSL 5(6)../..-5, PSL 5(6)../..-5 and PSM 5(6)../..-5

PSL 6Y(H)1(2)F(D)/...-5	PSL 6Y(H)1(2)/...-5	PSL 6Y(H)F(D)/...-5	PSL 6Y(H)/...-5	PSL 5(6)U(H)1(2)F(D)/...-5	PSL 5(6)U(H)1(2)/...-5	PSL 5(6)U(H)F(D)/...-5	PSL 5(6)U(H)/...-5	PSV 5(6)B(S)1(2)F(D)/...-5	PSV 5(6)B(S)1(2)/...-5	PSV 5(6)B(S)F(D)/...-5	PSV 5(6)B(S)/...-5	PSL(V, M) 5(6)(H)1(2)F(D)/...-5	PSL(V, M) 5(6)(H)1(2)/...-5	PSL(V, M) 5(6)(H)F(D)/...-5	PSL(V, M) 5(6)(H)/...-5	Order coding Nomenclature	Item
												1	1	1	1	Connection compl. (PSL(V, M)5.)	1
												1	1	1	1	Connection compl. (PSL(V, M)6.)	1
								1	1	1	1					Connection compl. (PSV 5.)	1
								1	1	1	1					Connection compl. (PSV 6.)	1
				1	1	1	1									Connection compl. (PSL 5)	1
				1	1	1	1									Connection compl. (PSL 6)	1
1	1	1	1													Connection compl.	1
1	1	1	1	1	1	1	1	1	1	1	1	1	1	1	1	Spacer	2
1	1	1	1	1	1	1	1	1	1	1	1	1	1	1	1	Pressure spring (PSL 5(6).../...-5)	3
1	1	1	1	1	1	1	1					1	1	1	1	Pressure spring (PSL 5(6)...**H**/...-5)	3
1	1	1	1	1	1	1	1	1	1	1	1	1	1	1	1	Controller piston	4
1	1	1	1	1	1	1	1	1	1	1	1	1	1	1	1	Flange	5
3	3	3	3	3	3	3	3	3	3	3	3	3	3	3	3	Socket head screw ISO 4762-M8x16-8.8-A2K	6
1	1	1	1	1	1	1	1	1	1	1	1	1	1	1	1	Type plate	7
6	6	6	6	6	6	6	6	6	6	6	6	6	6	6	6	Grooved drive stud ISO 8746-2,3x4-St-A2K	8
	2		2		2		2		2		2		2		2	Seal ring DIN 7603-Cu-A4x8x1	9
	2		2		2		2		2		2		2		2	Hexagon head screw ISO 4017-M4x6-A2K	10
1		1		1		1		1		1		1		1		Directional seated valve type WN 1F acc. to D 7470 A/1	11
(1)		(1)		(1)		(1)		(1)		(1)		(1)		(1)		or type WN 1D	
												1	1	1	1	Screw (with type PSL..)	12
												2	2	2	2	Screw (with type PSM..)	12 a
												1	1	1	1	Carburetor jet M4/0,6 (with type PSM..)	12 b
								1	1	1	1	1	1	1	1	Screw (with type PSV..)	12 c
								1	1	1	1	1	1	1	1	Carburetor jet M4/0,6 (with type PSV..)	12 d
									1	1	1	1	1	1	1	Filter screw	12 e
								2	2	2	2	2	2	2	2	Socket head screw ISO 4762-M8x10-8.8-A2K	13
1	1	1	1	1	1	1	1	1	1	1	1	1	1	1	1	Valve taper	14
1	1	1	1	1	1	1	1	1	1	1	1	1	1	1	1	Pressure spring	15
1	1	1	1	1	1	1	1	1	1	1	1	1	1	1	1	Screw	16
1	1	1	1	1	1	1	1	1	1	1	1	1	1	1	1	Hexagon nut ISO 4035-B M8x1-A2K	10
1	1	1	1	1	1	1	1	1	1	1	1	1	1	1	1	Acorn nut	11
1	1			1	1			1	1			1	1			Pressure reducing valve complete type AM 1-20 (coding **1**)	19
or	or			or	or			or	or			or	or			Pressure reducing valve complete type AM 1 D-40 (coding **2**)	19
		1	1			1	1			1	1			1	1	Screw	20
		1	1			1	1			1	1			1	1	Sleeve	21
1	1	1	1	1	1	1	1	1	1	1	1	1	1	1	1	Gap filter	22
3	3	3	3	3	3	3	3	3	3	3	3	4	4	4	4	Tapped plug complete with rubber seal (with type PSL..) G 1/4 A NBR (DIN 908)	23 (a)
												3	3	3	3	Tapped plug complete with rubber seal (with type PSV..) G 1/4 A NBR (DIN 908)	23
												1	1	1	1	Tapped plug complete with rubber seal with type PSM..) G 1/4 A NBR (DIN 908)	23 a
1	1	1	1	1	1	1	1	1	1	1	1	1	1	1	1	Sequence and damping valve compl. with seal ring DIN 7603-Cu-A10x14x1,5	24
								1	1	1	1					Screw (with type PSV..B)	25
1	1	1	1	1	1	1	1					1	1	1	1	Tapped plug	26
1	1	1	1	1	1	1	1									Piston	27
1	1	1	1	1	1	1	1									Pressure spring	28
1	1	1	1	1	1	1	1									Tapped plug	29
1	1	1	1	1	1	1	1	1	1	1	1	1	1	1	1	Seal kit **DS 7700-51**	30-40

Please specify the complete order coding when ordering spare parts.
Subject to change without notice

Connection block type PSV 5(6).(F, D)-5

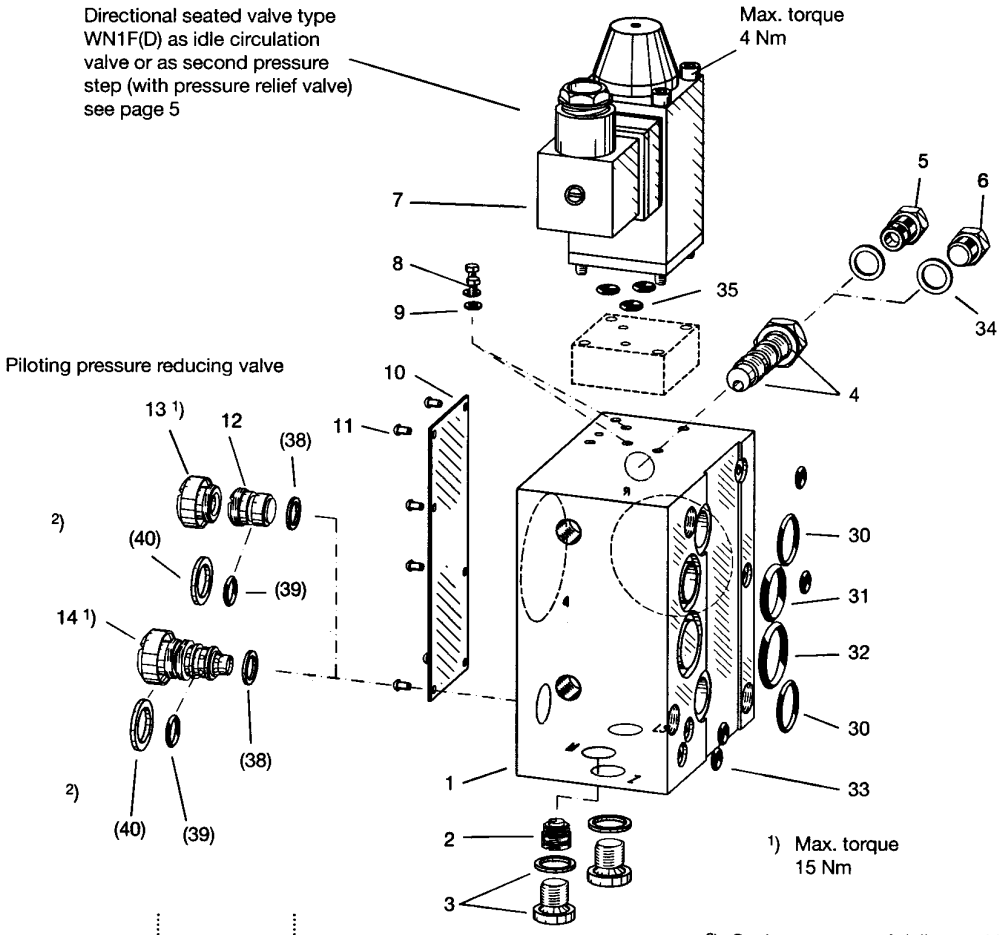

PSV 5(6) S1(2)F(D)-5	PSV 5(6) S1(2)-5	PSV 5(6) SF(D)-5	PSV 5(6) S-5	PSV 5(6) B1(2)F(D)-5	PSV 5(6) B1(2)-5	PSV 5(6) BF(D)-5	PSV 5(6) B-5	PSV 5(6) 1(2)F(D)-5	PSV 5(6) 1(2)-5	PSV 5(6) F(D)-5	PSV 5(6)-5	Order coding Nomenclature	Item
1	1	1	1	1	1	1	1	1	1	1	1	Connection compl. (PSL 5)	1
1	1	1	1	1	1	1	1	1	1	1	1	Connection compl. (PSL 6)	1
1	1	1	1	1	1	1	1	1	1	1	1	Gap filter	2
3	3	3	3	3	3	3	3	3	3	3	3	Tapped plug complete with rubber seal G 1/4 A NBR (DIN 908)	3
1	1	1	1									Sequence and damping valve compl. with seal ring DIN 7603-Cu-A10x14x1,5	4
				1	1	1	1					Screw	5
								1	1	1	1	Tapped plug	6
1		1		1		1		1		1		Directional seated valve type WN1F	7
1		1		1		1		1		1		Directional seated valve type WN1D	7
	2		2		2		2		2		2	Hexagon head screw ISO 4017-M4x6-A2K	8
	2		2		2		2		2		2	Seal ring DIN 7603-Cu-A4x8x1	9
1	1	1	1	1	1	1	1	1	1	1	1	Type plate	10
6	6	6	6	6	6	6	6	6	6	6	6	Grooved drive stud ISO 8746-2,3x4-St-A2K	11
		1	1			1	1			1	1	Sleeve	12
		1	1			1	1			1	1	Screw	13
1	1			1	1			1	1			Pressure reducing valve complete type AM 1-20 (coding 1)	14
1	1			1	1			1	1			Pressure reducing valve complete type AM 1 D-40 (coding 2)	14
1	1	1	1	1	1	1	1	1	1	1	1	Seal kit **DS 7700-51** (For listing see page 16)	30-40

Please specify the complete order coding when ordering spare parts.
Subject to change without notice

Directional seated valve type WN1F(D)

Order Examples: PSL 5 **F**/350-5 (as idle circulation valve)
PSL 5 **F80**/350-5 (with second pressure stage)

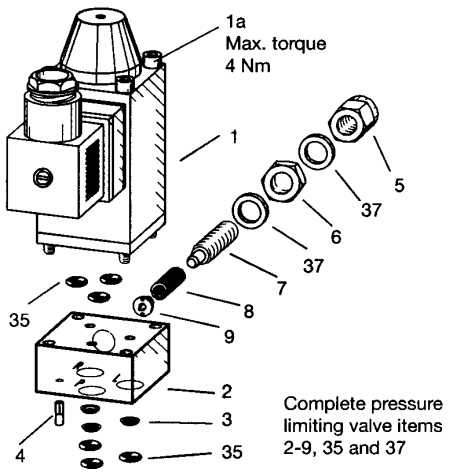

Order coding

	Nomenclature	Item
1	Directional seated valve type WN1F	1
	or type WN1D	
	with 4 socket head screws ISO 4762-M4x70-12.9-zinc coated	1 a
	for version with second pressure stage:	
	with 4 socket head screws ISO 4762-M4x85-12.9- zinc coated	1 a
1	Intermediate plate complete	2
2	Seal ring	3
1	Grooved pin DIN 1474-2,5x8	4
1	Acorn nut	5
1	Hexagon nut ISO 4035-BM8x1-04-A2K	6
1	Screw	7
1	Pressure spring	8
1	Valve taper	9
1	Seal kit **DS 7700-51**	35+37

Valve section

Basic element without additional functions

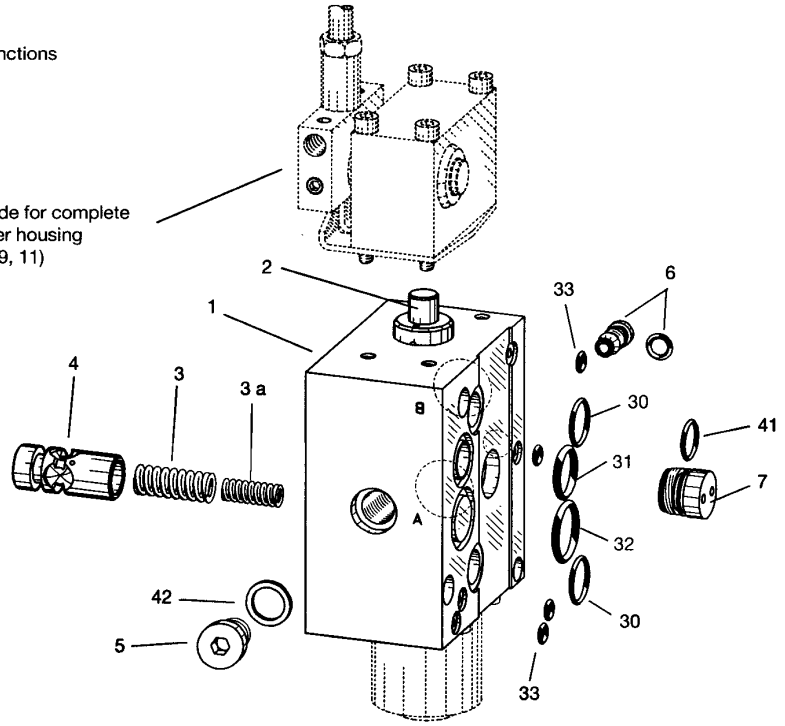

Spool coding

L, **M**, **F**, **H**, **J**, **B**, **R** and **O**

SL 5-55.././.	SL 5 52.././.	SL 5-51.././.	Order coding Nomenclature	Item
1	1		Spool housing, complete (with A(S), C(S), H, HA(S),P, PA)	1
1	1		Spool housing, complete (with E, EA(S))	1
		1	Spool housing, complete (with A(S), C(S), H, HA(S),P, PA)	1
		1	Spool housing, complete (with (with E, EA(S))	1
1	1	1	Valve spool	2 [1)]
1	1		Pressure spring	3
1			Pressure spring	3 a
1	1		Controller spool	4
1	1	1	Screw	5
1	1	1	Shuttle valve complete with O-ring 6,07x1,78 HNBR 90 Sh. and ball 4mm II DIN 5401	6
1	1	1	Tapped plug	7
1	1	1	Seal kit **DS 7700-51**	30-33 u. 40-42

[1)] For spare part order please specity spool type.
e. g.: spool type SL5-**L** 63/25.

Please specify the complete order coding when ordering spare parts.
Subject to change without notice

Manual actuation type A, A1(2), C, C1(2), HA, HA1, HA2
AS.. and CS.. version seaworthy
AG.. and CG..

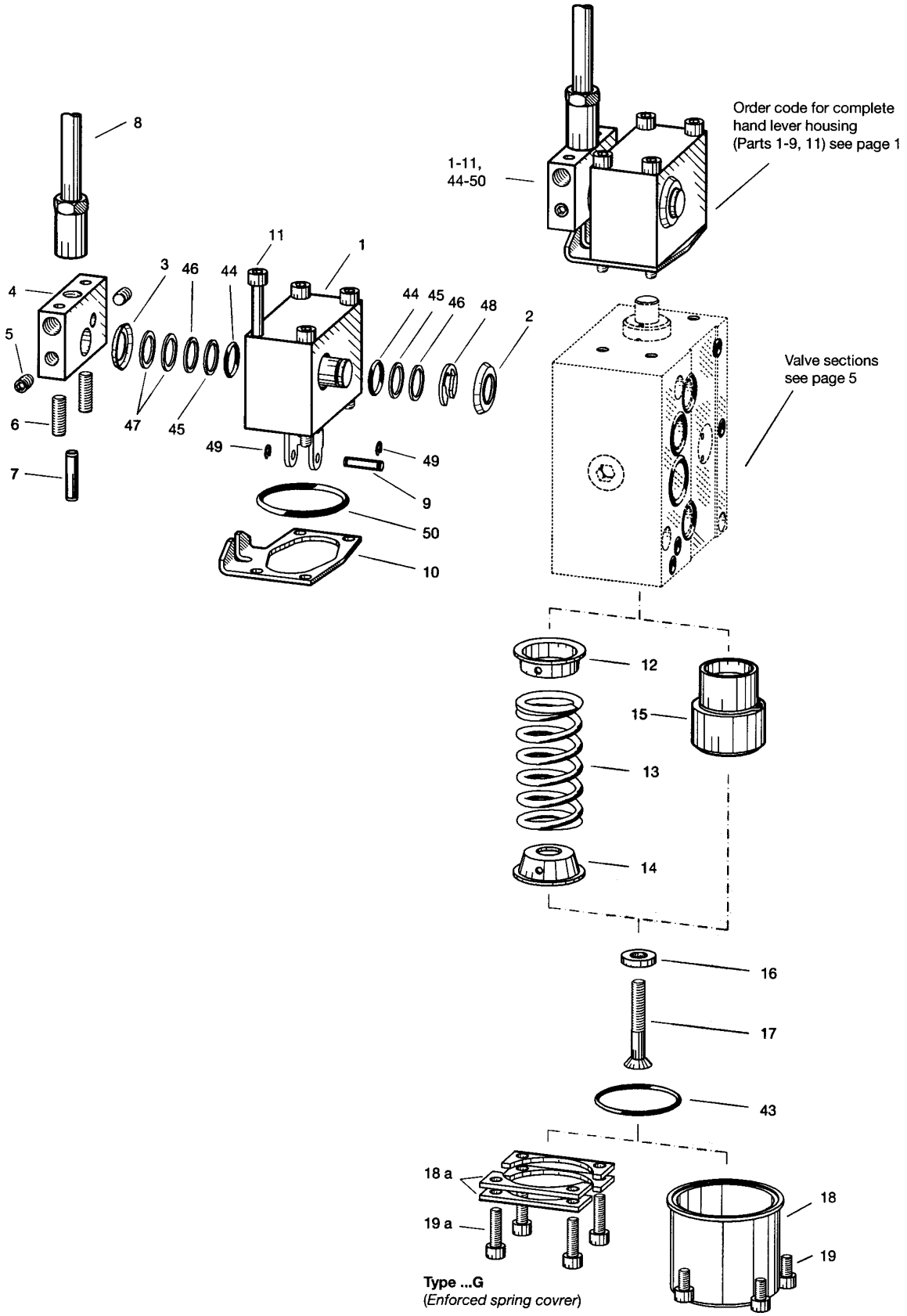

Please specify the complete order coding when ordering spare parts.
Subject to change without notice

Manual actuation type A, A1(2), C, C1(2), HA, HA1, HA2
AS.. and CS.. version seaworthy
AG.. and CG..

..G	..S	C 2	C 1	C	A 2, HA2	A 1, HA1	A, HA	Order coding Nomenclature	Item
1	1	1	1	1	1	1	1	Lever housing complete with shaft and tappet (not separately available!)	1
1	1	1	1	1	1	1	1	Cover	2 [1])
1	1	1	1	1	1	1	1	Cover	3 [1])
1	1	1	1	1	1	1	1	Control lever	4
2	2	2	2	2	2	2	2	Grub screw (stainless) ISO 4026-M6x6-A2-70	5
2	2	2	2	2	2	2	2	Grub screw (stainless) ISO 4026-M6x16-A2-70	6
1	1	1	1	1	1	1	1	Rollpin ISO 8748-5x20-St	7
1	1	1		1			1	Hand lever complete	8
1	1	1			1			Hand lever complete	8
1	1	1	1	1	1	1	1	Bolt	9
1	1	1	1	1	1	1	1	Spacer	10
4	4	4	4	4	4	4	4	Socket head screw ISO 4762-M5x50-A2-70	11
1	1	1			1	1	1	Spring cap complete	12
1	1	1			1	1	1	Pressure spring	13
1	1	1			1	1	1	Spring cap complete	14
1	1	1	1	1				Detent complete	15
1	1	1	1	1	1	1	1	Disc	16
1	1	1	1	1	1	1	1	Flat head screw DIN 7991-M6x35-8.8	17
1	1	1	1	1	1	1	1	Spring cover	18
4								Flange	18 a
		4	4	4	4	4	4	Socket head screw ISO 4762-M6x6- A2-70	19
4								Socket head screw ISO 4762-M6x12-12.9-A2K	19 a
1	1	1	1	1	1	1	1	Seal kit **DS 7700-52**	43-50

[1]) fill up with longterm lube e. g.: OPTITEMP HT2EP prior to assembly.

Please specify the complete order coding when ordering spare parts.
Subject to change without notice

Electro hydraulic actuation
type EA(S), EA(S)1, EA(S)2 and E

also version with additional elements
Code **B, G** and **T**
(e. g.: EAS1 etc.)

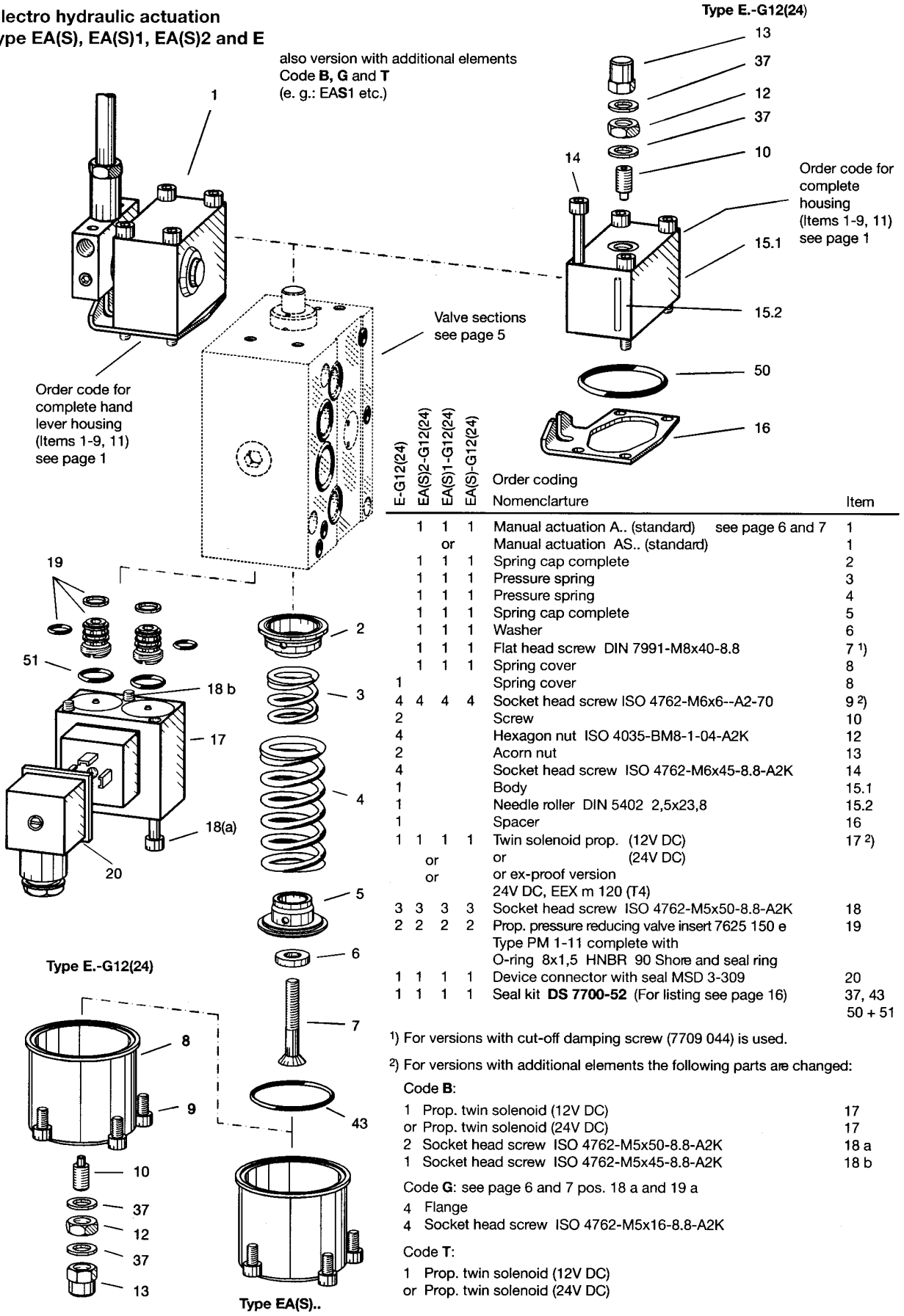

E-G12(24)	EA(S)2-G12(24)	EA(S)1-G12(24)	EA(S)-G12(24)	Order coding Nomenclarture	Item
	1	1	1	Manual actuation A.. (standard) see page 6 and 7	1
		or		Manual actuation AS.. (standard)	1
	1	1	1	Spring cap complete	2
	1	1	1	Pressure spring	3
	1	1	1	Pressure spring	4
	1	1	1	Spring cap complete	5
	1	1	1	Washer	6
	1	1	1	Flat head screw DIN 7991-M8x40-8.8	7 [1])
	1	1	1	Spring cover	8
1				Spring cover	8
4	4	4	4	Socket head screw ISO 4762-M6x6--A2-70	9 [2])
2				Screw	10
4				Hexagon nut ISO 4035-BM8-1-04-A2K	12
2				Acorn nut	13
4				Socket head screw ISO 4762-M6x45-8.8-A2K	14
1				Body	15.1
1				Needle roller DIN 5402 2,5x23,8	15.2
1				Spacer	16
1	1	1	1	Twin solenoid prop. (12V DC)	17 [2])
	or			or (24V DC)	
	or			or ex-proof version	
				24V DC, EEX m 120 (T4)	
3	3	3	3	Socket head screw ISO 4762-M5x50-8.8-A2K	18
2	2	2	2	Prop. pressure reducing valve insert 7625 150 e	19
				Type PM 1-11 complete with	
				O-ring 8x1,5 HNBR 90 Shore and seal ring	
1	1	1	1	Device connector with seal MSD 3-309	20
1	1	1	1	Seal kit **DS 7700-52** (For listing see page 16)	37, 43 50 + 51

[1]) For versions with cut-off damping screw (7709 044) is used.

[2]) For versions with additional elements the following parts are changed:

Code **B**:

1	Prop. twin solenoid (12V DC)	17
or	Prop. twin solenoid (24V DC)	17
2	Socket head screw ISO 4762-M5x50-8.8-A2K	18 a
1	Socket head screw ISO 4762-M5x45-8.8-A2K	18 b

Code **G**: see page 6 and 7 pos. 18 a and 19 a

4 Flange
4 Socket head screw ISO 4762-M5x16-8.8-A2K

Code **T**:

1 Prop. twin solenoid (12V DC)
or Prop. twin solenoid (24V DC)

Please specify the complete order coding when ordering spare parts.
Subject to change without notice

Hydraulic Actuation type HA, HA1(2), H, HAS and HAS1(2) seaworthy version

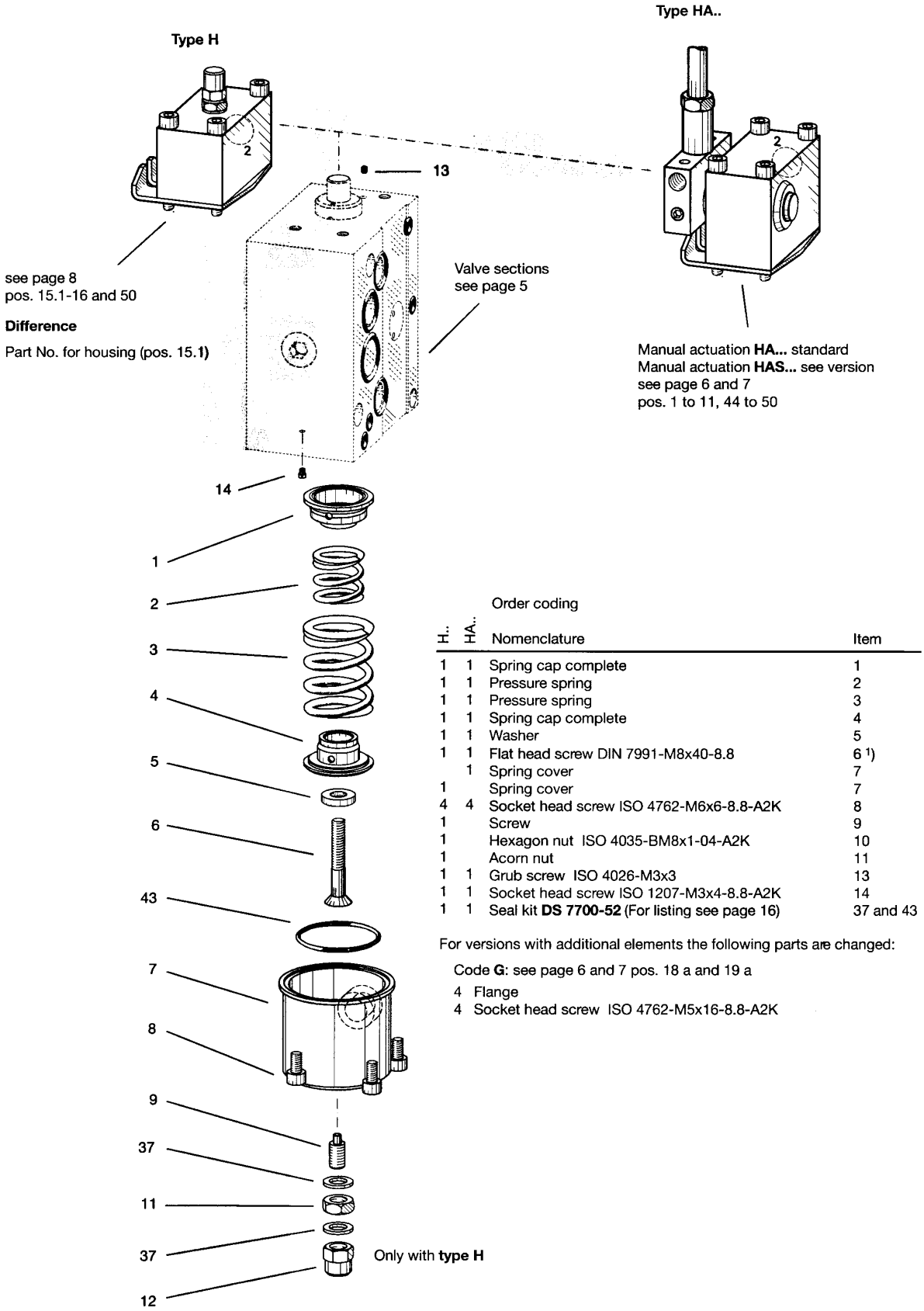

Order coding

H..	HA..	Nomenclature	Item
1	1	Spring cap complete	1
1	1	Pressure spring	2
1	1	Pressure spring	3
1	1	Spring cap complete	4
1	1	Washer	5
1	1	Flat head screw DIN 7991-M8x40-8.8	6 [1])
	1	Spring cover	7
1		Spring cover	7
4	4	Socket head screw ISO 4762-M6x6-8.8-A2K	8
1		Screw	9
1		Hexagon nut ISO 4035-BM8x1-04-A2K	10
1		Acorn nut	11
1	1	Grub screw ISO 4026-M3x3	13
1	1	Socket head screw ISO 1207-M3x4-8.8-A2K	14
1	1	Seal kit **DS 7700-52** (For listing see page 16)	37 and 43

For versions with additional elements the following parts are changed:

Code **G**: see page 6 and 7 pos. 18 a and 19 a

4 Flange
4 Socket head screw ISO 4762-M5x16-8.8-A2K

Please specify the complete order coding when ordering spare parts.
Subject to change without notice

Pneumatic actuation type P, PA and PA1(2)

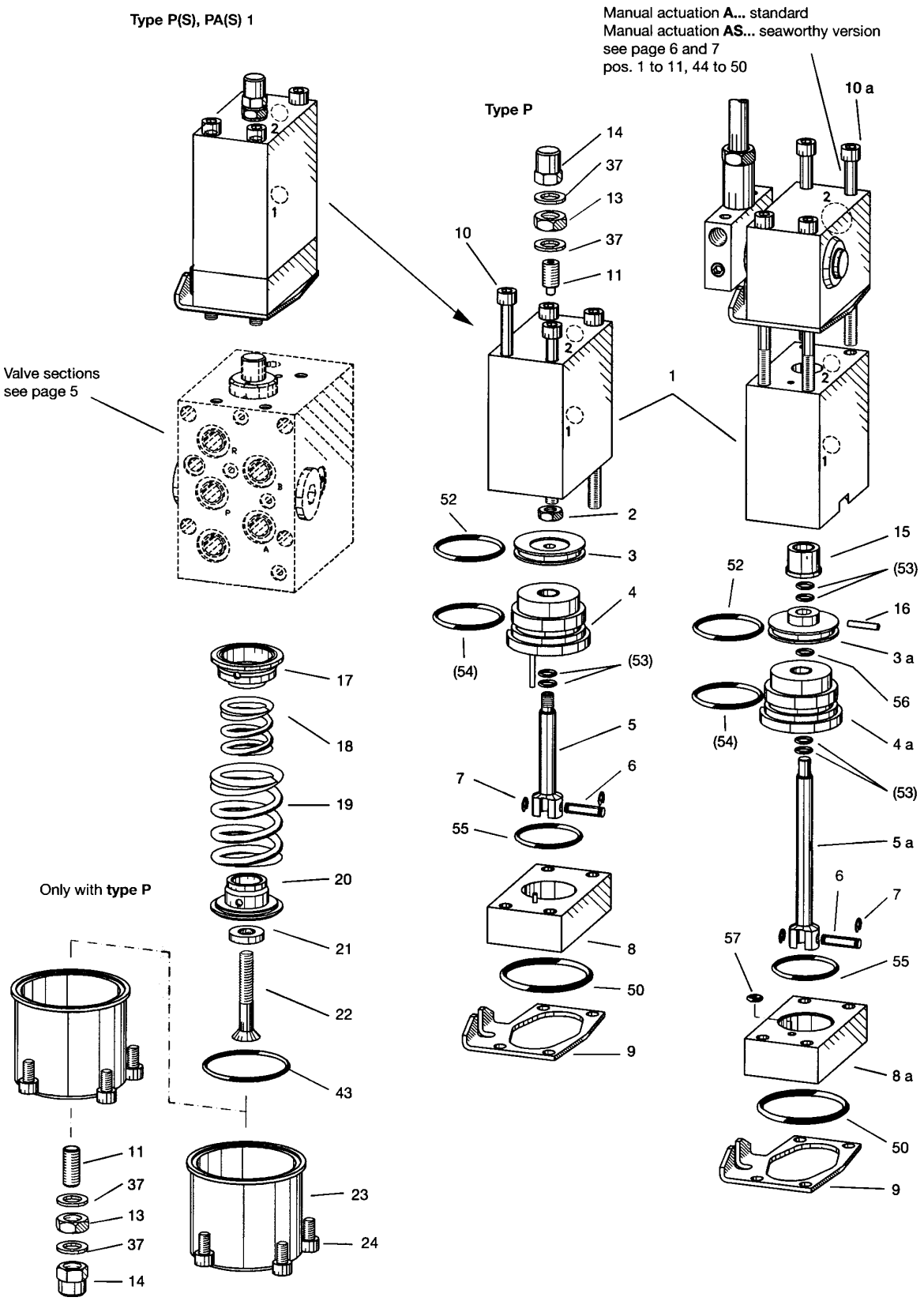

Please specify the complete order coding when ordering spare parts.
Subject to change without notice

Pneumatic actuation type P, PA and PA1(2)

Order coding

P..	PA..	Nomenclature	Item
1		Body	1
	1	Body	1
1		Hexagon nut ISO 4035-BM6x1-04-A2K	2
1		Piston	3
	1	Piston	3 a
1		Rod guide complete	4
		with O-ring 7,65x1,78 NBR 70 Shore and	(53)
		O-ring 31,42x2,62 NBR 90 Shore	(54)
	1	Rod guide complete	4 a
		with O-ring 7,65x1,78 NBR 70 Shore and	(53)
		O-ring 31,42x2,62 NBR 90 Shore	(54)
1		Rod	5
	1	Rod	5 a
1	1	Bolt	6
2	2	Circlip DIN 6799-3.2	7
1		Plate complete	8
	1	Plate	8 a
1	1	Spacer	9
4		Socket head screw ISO 4762-M6x100-8.8-A2K	10
	4	Socket head screw ISO 4762-M6x150-8.8-A2K	10 a
2		Screw	11
2		Hexagon nut ISO 4035-BM8x1-04-A2K	13
2		Acorn nut	14
	1	Sleeve complete	15
		with O-ring 7,65x1,78 NBR 70 Shore	(53)
	1	Rollpin ISO 8748-3x16-St	16
1	1	Spring cap complete	17
1	1	Pressure spring	18
1	1	Pressure spring	19
1	1	Spring cap complete	20
1	1	Washer	21
1	1	Flat head screw DIN 7991-M8x40-8.8	22 [1])
	1	Spring cover	23
1		Spring cover	23
4	4	Socket head screw ISO 4762-M6x6-8.8-A2K	24
1	1	Seal kit **DS 7700-52** and **DS 7700-53**	37, 43 and 54 to 59

Please specify the complete order coding when ordering spare parts.
Subject to change without notice

Valve sections with functional cut-off

Type	assembly kit I	assembly kit II
A...F(P)1, F(P)2, F(P)3	b	a
B...F(P)1, (F(P)2, F(P)3	a	b
A...B...F(P)1, F(P)2, F(P)3	-	a and b

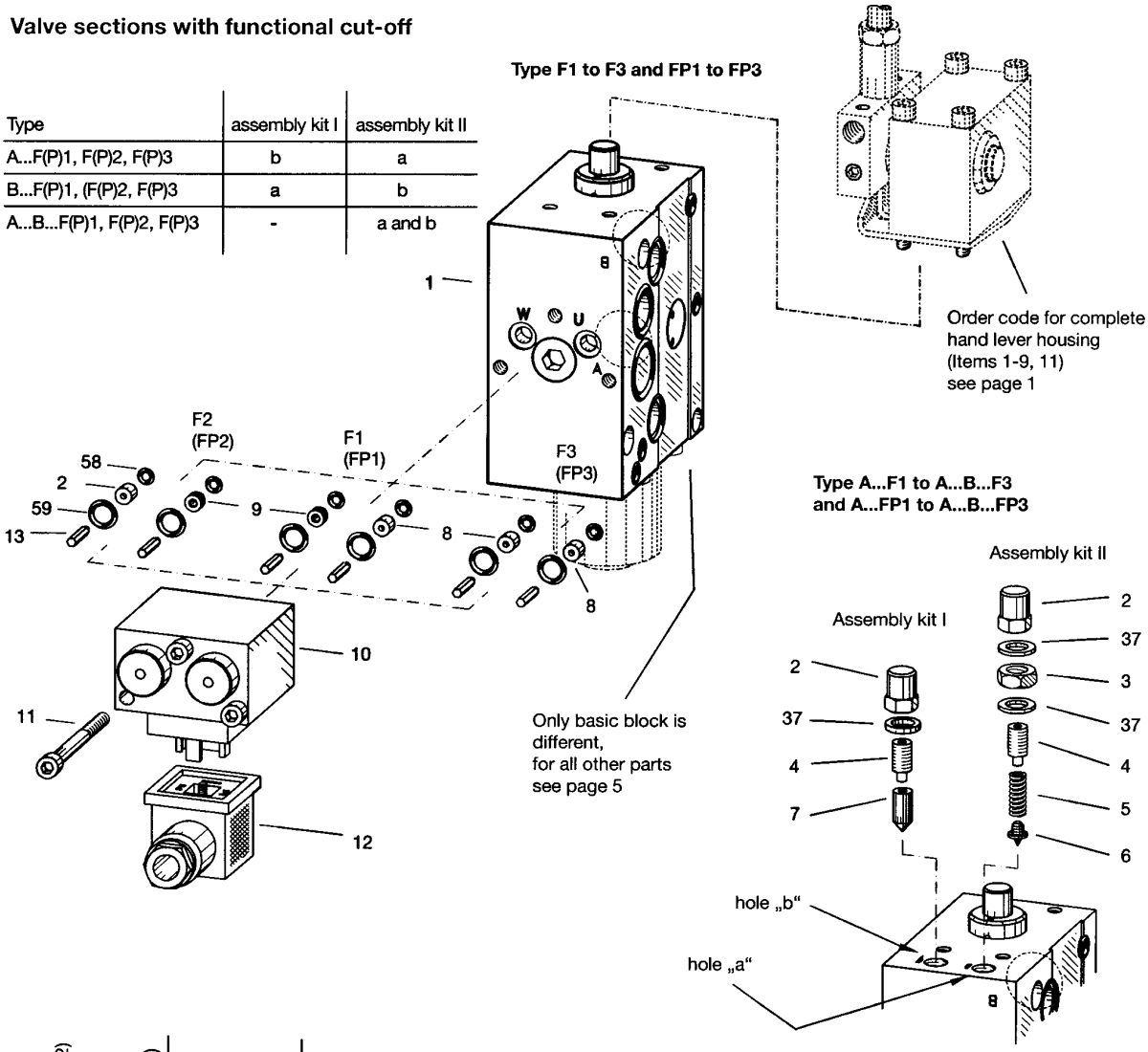

A...B...F(P)3	A...B...F(P)1(2)	A(B)...F(P)3	A(B)...F(P)1(2)	FP3	FP2	FP1	F3	F2	F1	Order coding Nomenclature	Item
										Basic block pre-assembled:	
				1	1	1	1	1	1	for type SL5-5...	1 [1])
1	1	1	1							or for type SL5-...	1 [1])
1	1	1	1							or for type SL5-51...	1 [1])
2	2	2	2							Acorn nut	2
2	2	1	1							Hexagon nut ISO 4035-B-M8x1x1-A2K	3
2	2	2	2							Screw	4
2	2	2	2							Pressure spring	5
2	2	1	1							Valve taper	6
		1	1							Bolt	7
2	1	2	1	2	1	1	2	1	1	Valve complete	8
										with O-ring 3x1,5 HNBR 90 Shore and	(58)
										O-ring 6,86x1,78 HNBR 90 Shore	(59)
	1		1		1	1		1	1	Plug complete	9
										with O-ring 3x1,5 HNBR 90 Shore and	(58)
										O-ring 6,86x1,78 HNBR 90 Shore	(59)
1	1	1	1				1	1	1	On/off twin solenoid 12V DC	10
(1)	(1)	(1)	(1)				(1)	(1)	(1)	or on/off twin solenoid 24V DC	10
1.	1.	1	1	1	1	1				Prop. twin solenoid 12V DC	10
(1)	(1)	(1)	(1)	(1)	(1)	(1)				or prop. twin solenoid 24V DC	10
3	3	3	3	3	3	3	3	3	3	Socket head screw ISO 4762-M5x50-8.8-A2K	11
1	1	1	1	1	1	1	1	1	1	Device connector MSD3-309 with seal	12
2	2	2	2	2	2	2	2	2	2	Pin	13
1	1	1	1	1	1	1	1	1	1	Seal kit **DS 7700-52 and DS 7700-53**	37, 58
										(For listing, see page 16)	and 59

[1]) Part No. for actuations type A, C, H, HA, P and PA.
Part No. in bracket for actuations type E and EA.

Please specify the complete order coding when ordering spare parts.
Subject to change without notice

Valve section with LS-pressure limiting valve

Type A... to C...

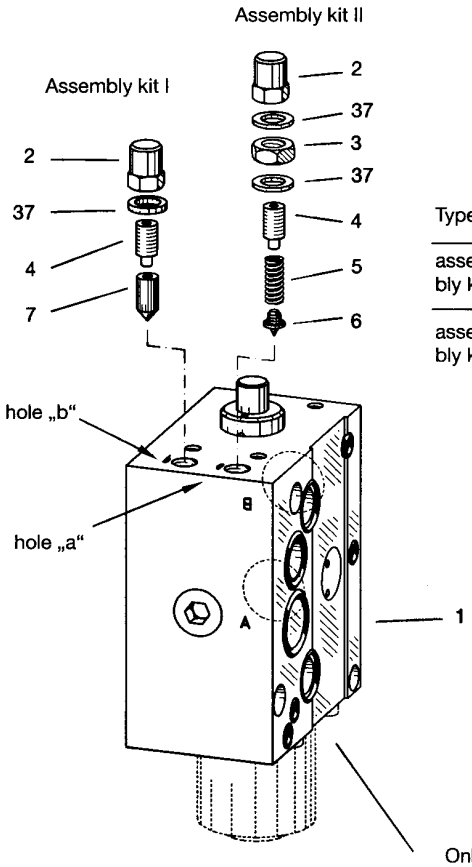

Type	A...(S)	B...(S)	A...B...(S)	C...
assembly kit I	b	a	-	-
assembly kit II	a	b	a u. b	a

Order code for complete hand levering housing (Parts 1-9, 11) see page 1

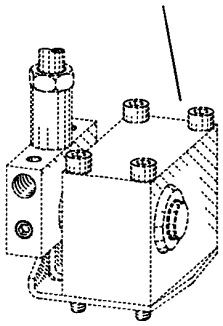

with version A...S to A...B...S items 2 to 8, like below

Type S... bis / *to* A...B...S

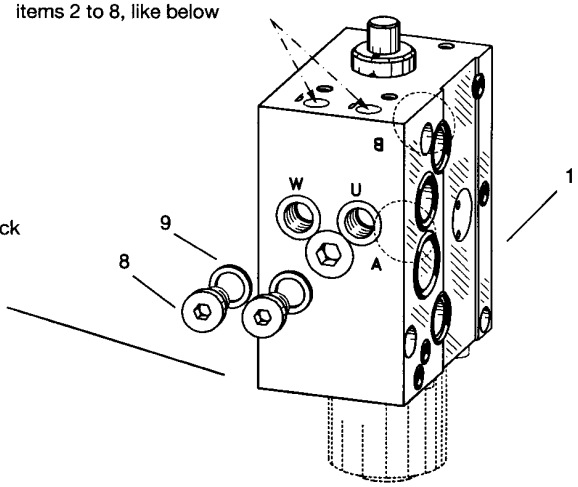

Only basic block is different, all other items see page 5

A...B...S	B...S	A...S	S...	C...	A...B	B...	A...	Order coding Nomenclature	Item
								Basic block pre-assembled:	
				1				for type SL5-...	1 [1])
					1	1	1	or for type SL5-...	1 [1])
			1					or for type SL5-...	1 [1])
1	1	1						for type SL5-...	1 [1])
2	2	2		1	2	2	2	Acorn nut	2
2	1	1		1	2	1	1	Hexagon nut ISO 4035-BM8x1-8.A2K	3
2	2	2		1	2	2	2	Screw	4
2	1	1		1	2	1	1	Pressure spring	5
2	1	1		1	2	1	1	Valve taper	6
	1	1				1	1	Bolt	7
2	2	2	2					Tapped plug DIN 908-G 1/8 A-St-A2K	8
2	2	2	2					Seal ring DIN 7603-10x14x1,5	9
1	1	1	1	1	1	1	1	Seal kit **DS 7700-52** (For listing see page 16)	37

[1]) Part No. for actuations type A, C, H, HA, P and PA. Part No. in bracket for actuations type E and EA.

Please specify the complete order coding when ordering spare parts.
Subject to change without notice

End plates

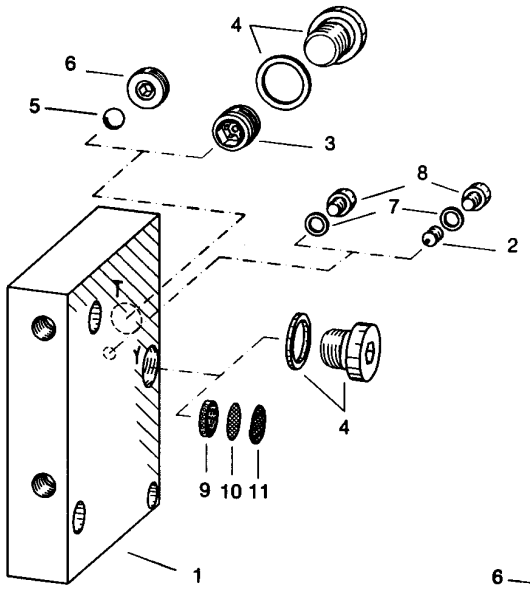

Type E1, E2, E4, E5

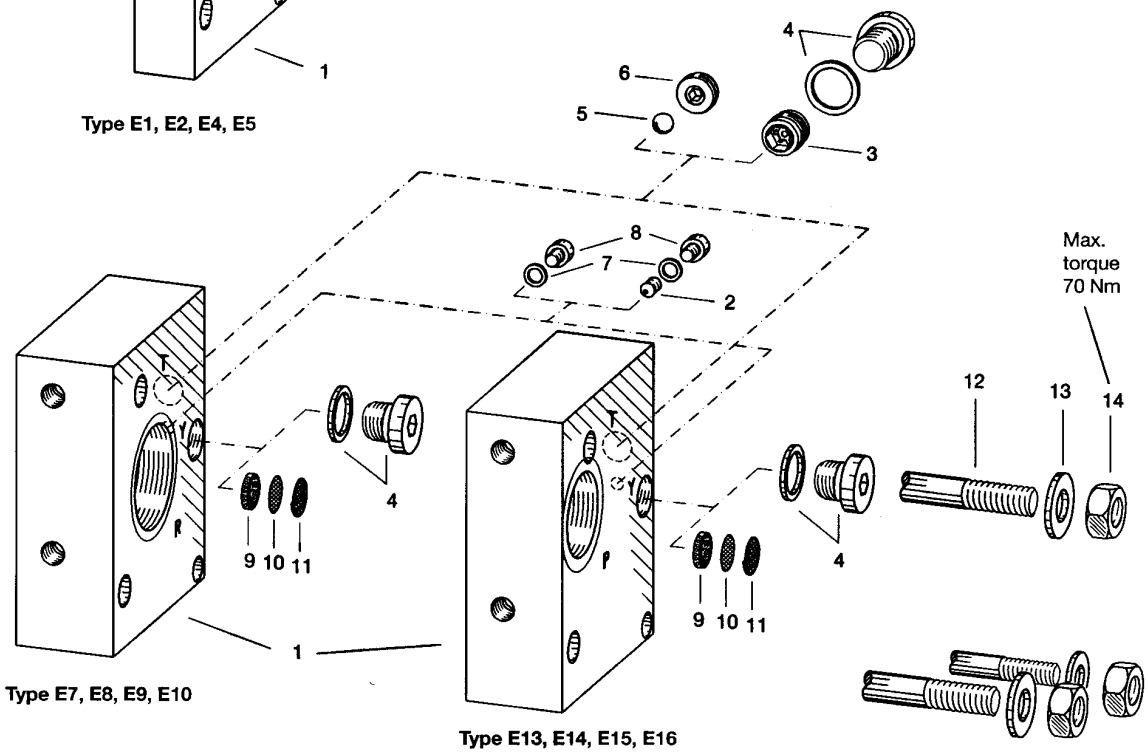

Type E7, E8, E9, E10

Type E13, E14, E15, E16

E16	E15	E14	E13	E10	E9	E8	E7	E5	E4	E2	E1	Order coding Nomenclature	Item
								1	1	1	1	End plate complete	1
				1	1	1	1					End plate complete	1
1	1	1	1									End plate complete	1
1		1		1		1		1		1		Grub screw ISO 4027-M5x5-45H	2
1	1			1	1			1	1			Check valve insert complete type RC1	3
1	2		1	1	2		1	1	2		1	Tapped plug complete with rubber seal DIN 908-G 1/4 A	4
		1	1			1	1			1	1	Ball 7mm II DIN 5401	5
		1	1			1	1			1	1	Tapped disc	6
1	1	1	1	1	1	1	1	1	1	1	1	Seal ring DIN 7603-Cu-A5x7,5x1	7
1	1	1	1	1	1	1	1	1	1	1	1	Socket head screw ISO 4027-M5x5-45 H	8
1		1		1		1		1		1		Filter cap	9
1		1		1		1		1		1		Fine filter	10
1		1		1		1		1		1		Filter	11
3	3	3	3	3	3	3	3	3	3	3	3	Tension rod type **E1-E16 and ZPL 53**	12-14

Please specify the complete order coding when ordering spare parts.
Subject to change without notice

Intermediate plate ZPL 53

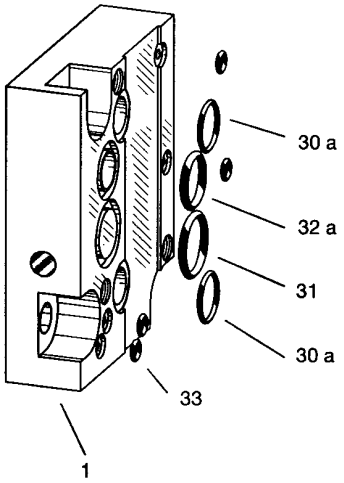

Order coding

	Nomenclature	Item
1	Intermediate plate complete	1
3	Tension rods see page 14	12-14
1	Seal kit **DS 7700-51**	30 a-33

Tension rods

	Number of valve sections and end plate type **E1, E2, E4, E5**									
Item	1	2	3	4	5	6	7	8	9	10
12	3 socket head screws ISO 4762-M12x..-A2-70	3 tire-rod DIN 975-M12x..-A2-70								
	100	180	240	305	365	430	490	555	615	680
13	3 washers ISO 7089-13-140HV-A2K									
14	—	3 hexagon nuts ISO 4033-M12-A2K								

	Number of valve sections and end plate type **E 7, E8, E9, E10, E13, E14, E15, E16**									
Item	1	2	3	4	5	6	7	8	9	10
12	3 tire-rod DIN 975-M12x..-8.8-A2K									
	130	195	255	320	380	445	505	570	630	695
13	3 washers ISO 7089-13-140HV-A2K									
14	3 hexagon nuts ISO 4033-M12-A2K									

	Number of valve sections and intermediate plate type **ZPL 53**					
Item	0	1	2	3	4	5
12	socket head screws ISO 4762-M12..-A2-70		3 tire-rod DIN 975-M12x..-A2-70			
	25	90	150	225	288	350
13	3 washers ISO 7089-13-140HV-A2K					
14	—	—	—	3 hexagon nuts ISO 4033-M12-A2K		

Please specify the complete order coding when ordering spare parts.
Subject to change without notice

Seal kits:

Seal kit: **DS 7700-51**
(Connection block)

	Nomenclature	Item
2	O-ring 18,77x1,78 HNBR 90 Shore	30
2	O-ring 14x1,78 HNBR 90 Shore	30 a
1	O-ring 17,12x2,62 HNBR 90 Shore	31
2	O-ring 21,89x2,62 HNBR 90 Shore	32
1	O-ring 13,94x2,62 HNBR 90 Shore	32 a
4	O-ring 4,47x1,78 HNBR 90 Shore	33
1	Seal ring DIN 7603-Cu-A10x14x1,5	34
3	O-ring 6x1,5 NBR 90 Shore	35
1	Seal ring DIN 7603-Cu-A27x32x2	36
4	Seal ring DIN 7603-Cu-A8x12x2	37
1	Seal ring	38
1	O-ring 9x1,5 NBR 90 Shore	39
1	Ermeto ED 14x1,5/R 1/4	40

Seal kit: **DS 7700-52**
(Valve section)

	Nomenclature	Item
2	O-ring 18,77x1,78 HNBR 90 Shore	30
1	O-ring 17,12x2,62 HNBR 90 Shore	31
2	O-ring 21,89x2,62 HNBR 90 Shore	32
4	O-Ring 4,47x1,78 HNBR 90 Shore	33
1	Seal ring DIN 7603-Cu-A10x14x1,5	34
3	O-ring 6x1,5 NBR 90 Shore	35
1	Seal ring DIN 7603-Cu-A27x32x2	36
4	Seal ring DIN 7603-Cu-A8x12x2	37
1	Seal ring	38
1	O-ring 9x1,5 NBR 90 Shore	39
1	Ermeto ED 14x1,5/R 1/4	40
1	O-ring 13x1,5 HNBR 90 Shore	41
1	Seal ring DIN 7603-Cu-16x20x1,5	42
1	O-ring 50,52x1,78 HNBR 90 Shore	43
2	O-ring 13,95x2,62 HNBR 70 Shore	44
2	Back-up ring	45
2	Back-up ring	46
2	Washer	47
1	Circlip DIN 6799-10 (A(A 1)	48
1	Circlip DIN 6799-10-1.4122 (AS(AS1))	48
2	Circlip DIN 6799-3.2	49
1	O-ring 40,94x2,62 HNBR 90 Shore	50
2	O-ring 12,42x1,78 HNBR 90 Sh	51

Seal kit: **DS 7700-53**
(Additionally for pneumatic actuation)

	Nomenclature	Item
1	O-ring 29,82x2,62 NBR 70 Shore	52
4	O-ring 7,65x1,78 NBR 70 Shore	53
1	O-ring 31,42x2,62 NBR 90 Shore	54
1	O-ring 29,82x2,62 NBR 90 Shore	55
1	O-ring 7,65x1,78 NBR 90 Shore	56
1	O-ring 4,47x1,78 HNBR 90 Shore	57
2	O-ring 3x1,5 NBR 90 Shore	58
2	O-ring 6,86x1,78 HNBR 90 Shore	59

REV	ALTERATION	DATE / SIGN
1	RELEASED FOR PRODUCTION	JHE–28.03.00

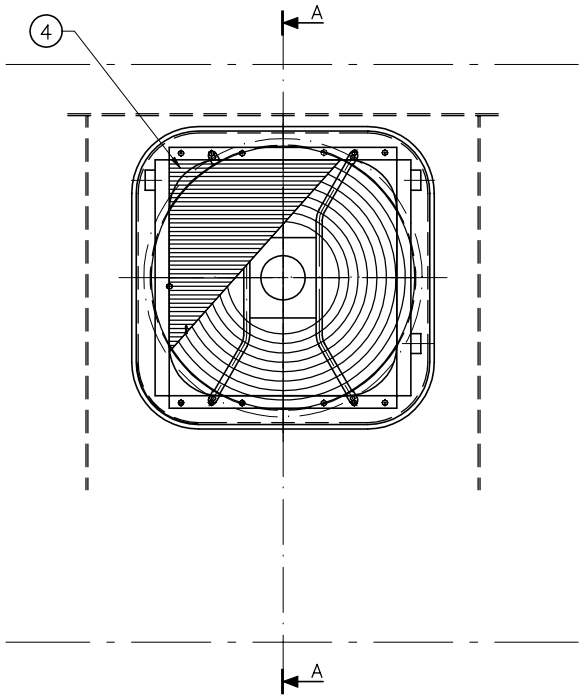

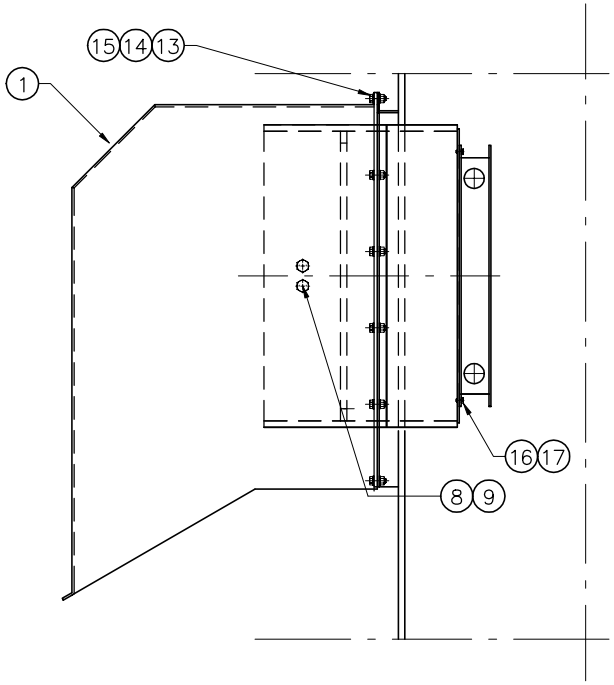

ELECTRICAL NOTE !

CABLE LOOP FROM NIPLE TO ELECTRIC MOTOR MUST ALLOW MOTOR TO BE SERVICED FROM INSIDE MACHINE ROOM WITH OUT DISCONNECTING CABLES

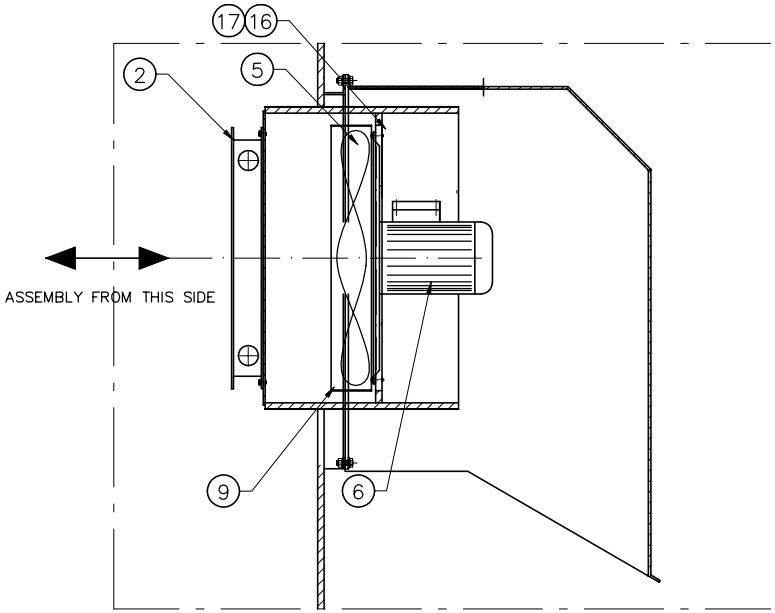

TOTAL WEIGHT [kg] ~232

NOS	ITEM / DIMENSION	POS	MATR / DRWG / ART NO	WEIGHT
16	WASHERS DIN 125 ø10	17	GALV	–
16	HEX.HEAD SCREWS DIN 933 M8x25	16	8.8 GALV	–
32	WASHERS DIN 125 ø12	15	GALV	–
16	LOCK NUT DIN 985 M12	14	8.8 GALV	–
16	HEX.HEAD SCREWS DIN 933 M12x35	13	8.8 GALV	–
		12		
		11		
		10		
2	PLUGG 1/2"	9		–
2	NIPPLE TRANBERG 1/2"	8		–
1	FAN EL.MOTOR	7		10
1	FAN	6		2
1	FAN GRATING	5		5
1	COOLER ELEMENT	4		17
1	DUCT EXTENCION	3	A4–7086	2
1	FAN DUCT	2	A4–7087	2
1	VENTILATION COVER	1	A2–7740	194

THIS DRAWING IS THE PROPERTY OF **NORLIFT %** AND MUST NOT BE REPRODUCED WITHOUT OUR WRITTEN CONSENT

DRAWN BY JHE 28.03.00 | CHECKED BY | APPR BY

PROJECT

TTS - Norlift AS
MARINE CARGO GEAR

DRWG NAME
OILCOOLER & VENTILATION
DETAILS & ASSEMBLY

SCALE 1:10 E

DRWG NO A2–7739 REV 1

MASTER DRWG | REPLACED BY | REPLACES

REV	ALTERATION	DATE / SIGN
1	RELEASED FOR PRODUCTION	FTU 13.06.96

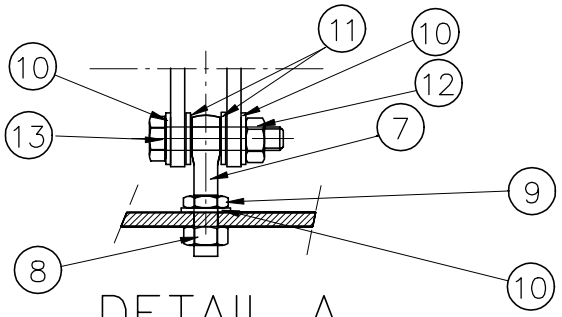

DETAIL A

SCALE 1:2.5

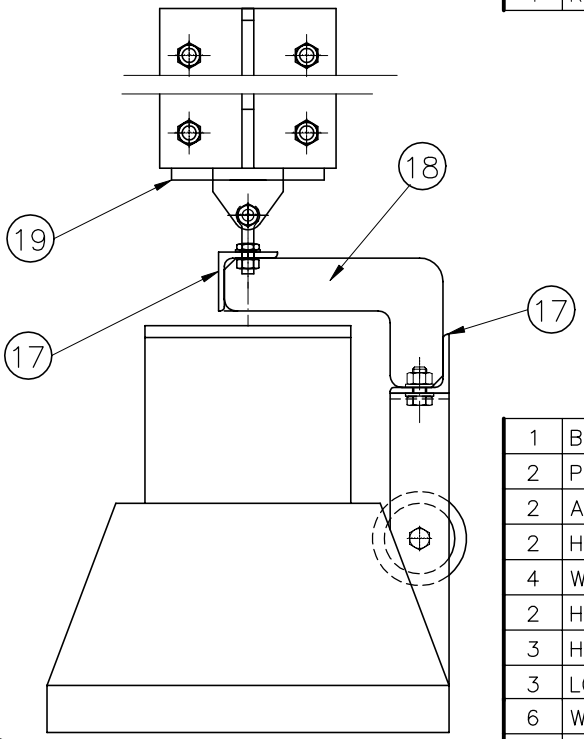

VIEW A

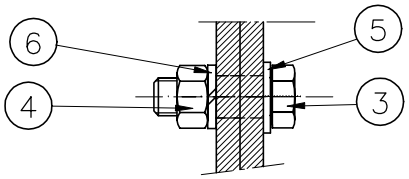

DETAIL B

SCALE 1.2.5

TOTAL WEIGHT [Kg]~ 32Kg

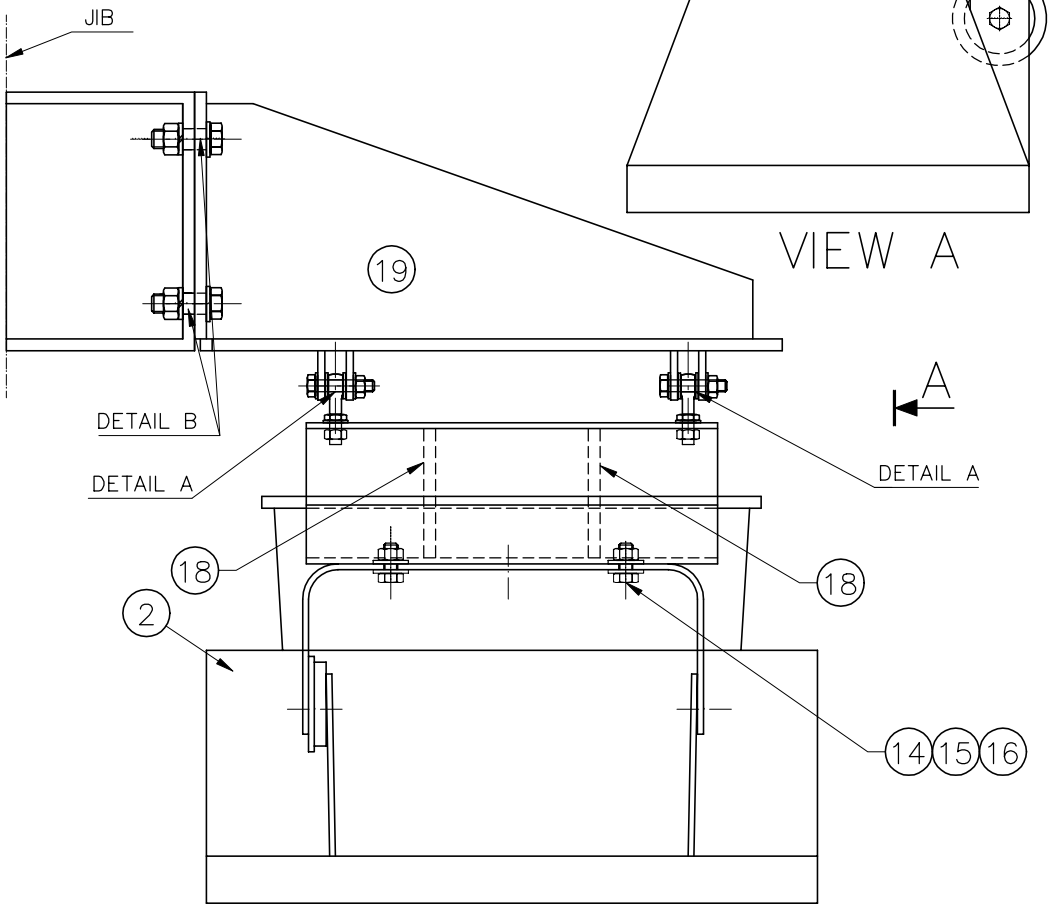

NOS	ITEM / DIMENSION	POS	MATR / DRWG / ART NO	WEIGHT
1	BRACKET FOR BOLTING OF FLOOD LIGHT	19	A3–6987	20
2	PLATE POS 1	18	A3–6986	3
2	ANGEL BAR POS 2	17	A3–6986	1
2	HEX.NUT M12 DIN 934	16		–
4	WASHER M12 DIN125	15	A4	–
2	HEX.SCREW M12x40 DIN 933 8.8	14	A4	–
3	HEXAGON SCREW M10 X 50 DIN 934	13	A4	–
3	LOCKING NUT M10 DIN 982	12	A4	–
6	WASHER M10	11	A4	–
3	STEEL WASHER M10 DIN125	10	A4	–
3	HEX.NUT M10 DIN 934	9	A4	–
3	LOCKING NUT M10 DIN ****	8	A4	–
3	EYEBOLT M10X50 DIN 444	7	A4	–
4	SPRING WASHER M16 DIN 127	6	FZB	–
4	STEELWSAHER M16 DIN 125	5	FZB	–
4	LOCKING NUT M16 DIN 6924–8	4	FZB	–
4	HEX.SCREW M16 X 50 DIN 933–8.8	3	FZB	–
1	FLOODLIGHT –H21/–H22	2	A3–8536 / A3–8537	8

THIS DRAWING IS THE PROPERTY OF NORLIFT % AND MUST NOT BE REPRODUCED WITHOUT OUR WRITTEN CONSENT

DRAWN BY FTU 12.08.96 | CHECKED BY | APPR BY

PROJECT

TS - Norlift AS
MARINE CARGO GEAR

DRWG NAME: FLOOD LIGHT ASSEMBLY

SCALE 1:5 E

DRWG NO A3–6979 REV 1

MASTER DRWG | REPLACED BY | REPLACES

REV	ALTERATION	DATE / SIGN
1	RELEASED FOR PRODUCTION	15.05.01 RLA
2	UPDATED POS 8–12	15.06.01 RLA

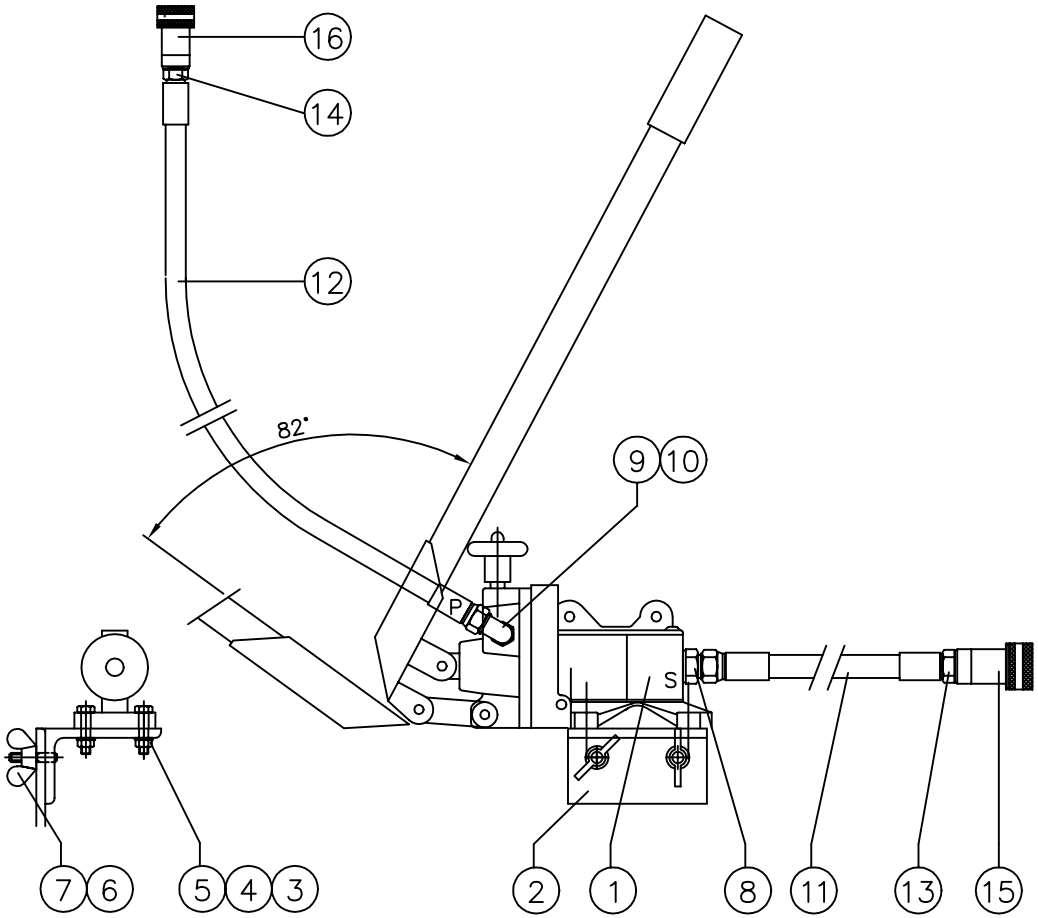

STOWING DIMENSIONS (WxLxH) = 90x300x620

TOTAL WEIGHT APPROX. [kg] = 9

NOS	ITEM / DIMENSION	POS	MATR / DRWG / ART NO	WEIGHT
1	OUICK CONN. FEMALE + DUST PLUG 3/8"	16	NV–06–F+TM–06	
1	OUICK CONN. FEMALE + DUST PLUG 1/2"	15	NV–08–F+TM–08	
1	DBS–SEAL 3/8"	14		
1	DBS–SEAL 1/2"	13		
1	HOSE E7 3/8" SAE 100 R1AT – L=4000	12	627–06–12–L+P02–06–06	1
1	HOSE E7 1/2" SAE 100 R1AT – L=1500	11	627–08–16–S+P02–08–08	1
1	COUPLING EW12LR EDOMD	10	A3C	
1	COUPLING GE12LR 1/4" EDOMD	9	A3C	
1	COUPLING GE16SR EDOMD	8	A3C	
2	FLY/WING NUT DIN 315 M10	7	ELZN	–
2	STUD BOLT DIN 938 M10X30	6	8.8 ELZN	–
4	WASHER DIN 125 A ø8.5	5	GALV	–
4	NUT DIN 934 M8	4	8. GALV	–
4	HEX SCREW DIN 931 M8x35	3	8.8 ELZN	–
1	BRACKET	2	A4–1304	1
1	HAND PUMP	1		5

THIS DRAWING IS THE PROPERTY OF TTS–NORLIFT % AND MUST NOT BE REPRODUCED WITHOUT OUR WRITTEN CONSENT

DRAWN BY RLA 14.05.01 | CHECKED BY RLA / 14.05.01 | APPR BY OHA/

PROJECT

TTS - Norlift AS
MARINE CARGO GEAR

DRWG NAME

EMERGENCY HAND PUMP
w/ ERMETO EO–2 FITTINGS

SCALE 1:5 E

DRWG NO A3–1450 REV 2

REPLACES A3–1369–1 | REPLACED BY | MASTER DRWG

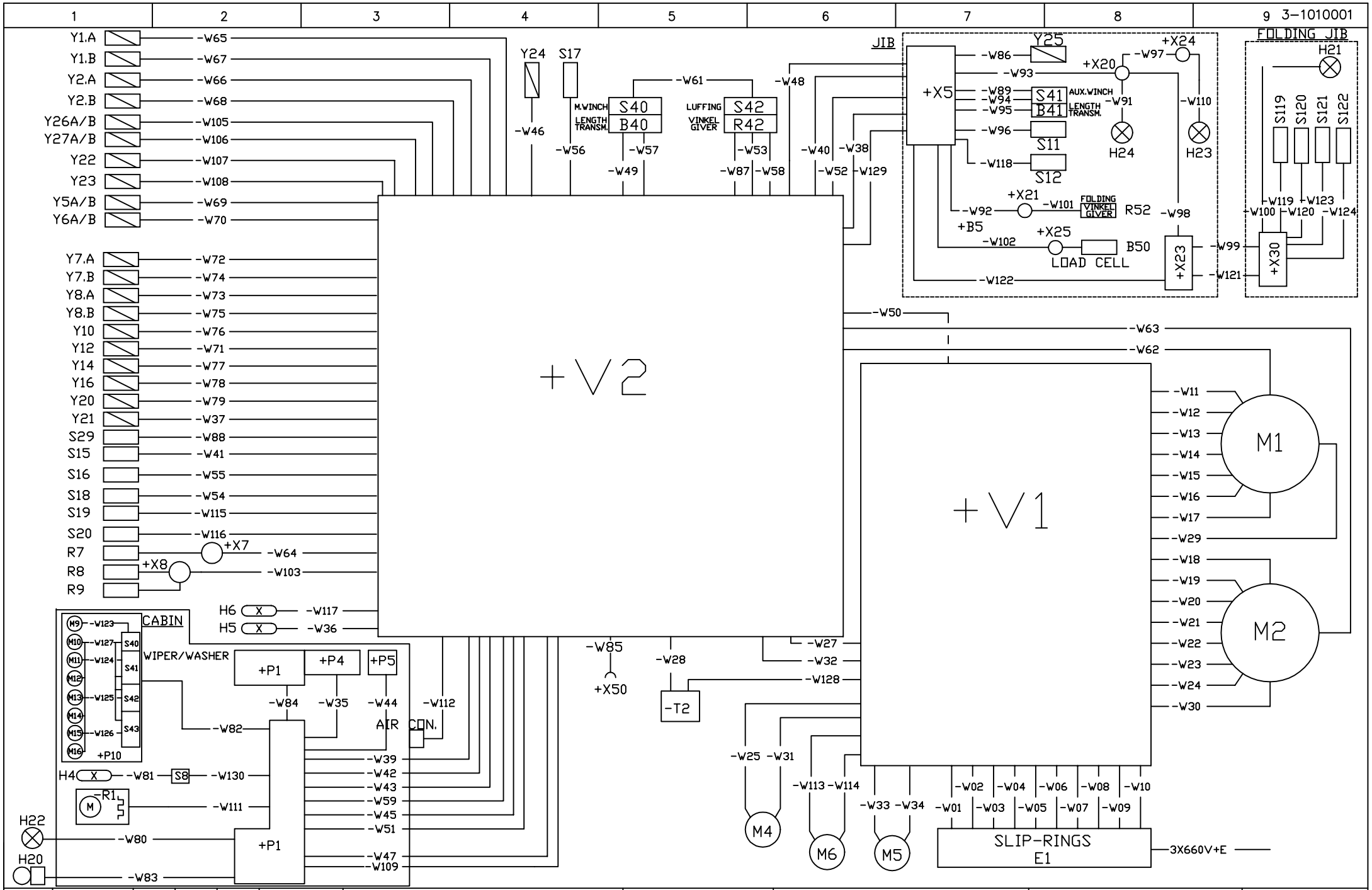
3-1010001
Y1.A
Y1.B
Y2.A
Y2.B
Y26A/B
Y27A/B
Y22
Y23
Y5A/B
Y6A/B
Y7.A
Y7.B
Y8.A
Y8.B
Y10
Y12
Y14
Y16
Y20
Y21
S29
S15
S16
S18
S19
S20
R7
R8
R9
+V2
+V1
JIB
+X5
Y25
+X24
+X20
-W97
S41
AUX.WINCH
B41
LENGTH TRANSM.
S11
S12
H24
H23
+X21
FOLDING VINKEL GIVER
R52
+B5
+X25
B50
LOAD CELL
+X23
FOLDING JIB
H21
S119
S120
S121
S122
+X30
Y24
S17
M.WINCH
S40
B40
LUFFING
S42
R42
VINKEL GIVER
+X7
+X8
H6
H5
CABIN
WIPER/WASHER
S40
S41
S42
S43
+P10
+P1
+P4
+P5
AIR CON.
H4
S8
-R1
H22
H20
-W85
+X50
-W28
-T2
M1
M2
M4
M6
M5
SLIP-RINGS
E1
3X660V+E
Date 30.01.01
Drawn by: JSB
Approved
Norm
Rev.
Alteration
Date
Sign.
Master drwg.
Replaces
Replased by
MJELLEM & KARLSEN VERFT A/S
M/V "SEIS RANGER"
TTS - Norlift AS
MARINE CARGO GEAR
ELECTRO HYDRAULIC OFFSHORE CRANE
GPCFO 2000-5020
CRANE NO.2078
BLOCK DIAGRAM
Project no.
2078
=
+V1
Scale
%
Drwg no.
A3-10100
Sheet 01
N.sh. 02

CABLE LIST

Cable no.	Type		From/To	Cable no.	Type		From/To	Cable no.	Type		From/To
-W01	RP	1x70	E1 - V1	-W37	ØLFLEX	3x1+E	V2 - Y21	-W73	ØLFLEX	3x1,5+E	V2 - Y8A
-W02	RP	1x70	E1 - V1	-W38	PURFLEX	12G1,5	V2 - X5	-W74	ØLFLEX	3x1,5+E	V2 - Y7B
-W03	RP	1x70	E1 - V1	-W39	RP	12x1,5	V2 - P1	-W75	ØLFLEX	3x1,5+E	V2 - Y8B
-W04	RP	1x70	E1 - V1	-W40	PURFLEX	12G1,5	V2 - X5	-W76	ØLFLEX	3x1,5+E	V2 - Y10
-W05	RP	1x70	E1 - V1	-W41	ØLFLEX	3x1,5+E	V2 - S15	-W77	ØLFLEX	3x1,5+E	V2 - Y14
-W06	RP	1x70	E1 - V1	-W42	RP	12x1,5	V2 - P1	-W78	ØLFLEX	3x1,5+E	V2 - Y16
-W07	RP	1x70	E1 - V1	-W43	RP	12x1,5	V2 - P1	-W79	ØLFLEX	3x1,5+E	V2 - Y20
-W08	RP	1x70	E1 - V1	-W44	RP	3x1,5	+P1-+P5	-W80	RP	2x1,5+E	P1 - H22
-W09	RP	1x70	E1 - V1	-W45	RP	12x1,5	V2 - P1	-W81	RP	2x1,5+E	S8 - H4
-W10	RP	1x70	E1 - V1	-W46	ØLFLEX	3x1,5+E	V2 - Y24	-W82	RP	2x1,5+E	P1 - P10 (WIPER PANEL)
-W11	RP	1x35	V1 - M1	-W47	RP	12G1,5	V2 - P1	-W83	RP	2x1,5+E	P1 - H20
-W12	RP	1x35	V1 - M1	-W48	ØLFLEX	3x1,5+E	V2 - +X5	-W84	RK	1X0,75	P1.left - P1
-W13	RP	1x35	V1 - M1	-W49	RC□P	4x2x0,5	V2 - B40	-W85	RP	2x1,5+E	+V2-X50
-W14	RP	1x35	V1 - M1	-W50	RP	3X1,5+E	V2 - V1	-W86	ØLFLEX	3x1,5+E	X5 - Y25
-W15	RP	1x35	V1 - M1	-W51	RC□P	4x2x0,5	V2 - P1	-W87	RP	3x1,5+E	+V2-R43(S42)
-W16	RP	1x35	V1 - M1	-W52	PURFLEX	12G1,5	V2 - X5	-W88	ØLFLEX	3x1,5+E	V2 - S29
-W17	RP	1x35	V1 - M1	-W53	RP	3x1,5+E	V2 - R42	-W89	RP	2x1,5+E	X5 - R41
-W18	RP	1x35	V1 - M2	-W54	ØLFLEX	3x1,5+E	V2 - S18	-W90			
-W19	RP	1x35	V1 - M2	-W55	ØLFLEX	3x1,5+E	V2 - S16	-W91	NMHV□	2x1,5+E	+X20 - H24
-W20	RP	1x35	V1 - M2	-W56	ØLFLEX	3x1,5+E	V2 - S17	-W92	RP	3x1,5+E	X5 - +X21
-W21	RP	1x35	V1 - M2	-W57	RP	7x1,5	V2 - S40	-W93	RP	4x1,5+E	X5 - X20
-W22	RP	1x35	V1 - M2	-W58	RP	7x1,5	V2 - S42	-W94	RP	7x1,5+E	+X5 - S41
-W23	RP	1x35	V1 - M2	-W59	RP	2x1,5+E	V2 - P1	-W95	RC□P	4pairx0.5	V2 - B41
-W24	RP	1x35	V1 - M2	-W60				-W96	RP	2x1,5+E	+X5 - S11
-W25	RP	3x1,5+E	V1 - M4	-W61	RP	2x1,5+E	(R40)S40 - S42(R43)	-W97	RP	2x1,5+E	+X20 - +X24
-W26	RP	2x1,5+E	V2 - P1	-W62	RP	2x1,5+E	V2 - M1(F3)	-W98	RP	2x1,5+E	+X20 - X23
-W27	RP	7x1,5+E	V1 - V2	-W63	RP	2x1,5+E	V2 - M2(F4)	-W99	RP	2x1,5+E	+X23 - X30
-W28	RP	3x2,5+E	V2 - T2	-W64	RP	2x1,5+E	V2 - X7	-W100	NMHV□	2x1,5+E	+X30 - H21
-W29	RP	2x1,5+E	V1 - M1(R2)	-W65	ØLFLEX	3x1,5+E	V2 - Y1.A	-W101	RP	3x1,5+E	+X21 - R52
-W30	RP	2x1,5+E	V1 - M2(R3)	-W66	ØLFLEX	3x1,5+E	V2 - Y2.A	-W102	RC□P	4x2x0,5	+B5 - B50
-W31	RP	2x1,5+E	V1 - M4(R4)	-W67	ØLFLEX	3x1,5+E	V2 - Y1.B	-W103	RP	4x1,5	+V2- +X8
-W32	RP	2x1,5+E	V1 - V2	-W68	ØLFLEX	3x1,5+E	V2 - Y2.B	-W104			
-W33	RP	3x1,5+E	V1 - M5	-W69	ØLFLEX	3x1,5+E	V2 - Y5A/B	-W105	ØLFLEX	3x1,5+E	+V2 - Y26A/B
-W34	RP	2x1,5+E	V1 - M5(R5)	-W70	ØLFLEX	3x1,5+E	V2 - Y6A/B	-W106	ØLFLEX	3x1,5+E	+V2 - Y27A/B
-W35	RP	2x1,5+E	P1 - P4	-W71	ØLFLEX	3x1,5+E	V2 - Y12	-W107	ØLFLEX	3x1,5+E	+V2 - Y22
-W36	RP	2x1,5+E	V2 - H5	-W72	ØLFLEX	3x1,5+E	V2 - Y7A	-W108	ØLFLEX	3x1,5+E	+V2 - Y23

				Date	30.01.01	MJELLEM & KARLSEN VERFT A/S M/V "SEIS RANGER"	TTS - Norlift AS MARINE CARGO GEAR	ELECTRO HYDRAULIC OFFSHORE CRANE GPCFO 2000-5020 CRANE NO.2078 CABLE LIST	Project no. 2078	=	
				Drawn by:	JSB					+V1	
				Approved					Scale %	Drwg no. A3-10100	Sheet 02
Rev.	Alteration	Date	Sign.	Norm		Master drwg.	Replaces	Replased by			N.sh. 03

CABLE LIST

Cable no.	Type		From/To	Cable no.	Type	From/To	Cable no.	Type	From/To
-W109	RP	2x1,5+E	+V2 - +P1						
-W110	NMHVØ	2x1,5+E	+X30 - H23						
-W111	RP	2x1,5+E	+P1 - R1						
-W112	RP	2x1,5+E	+V2 - AIR COND.						
-W113	RP	3x1,5+E	+V1 - M6						
-W114	RP	2x1,5+E	+V1 - M6(R6)						
-W115	ØLFLEX	3x1,5+E	+V2 - S19						
-W116	ØLFLEX	3x1,5+E	+V2 - S20						
-W117	RP	2x1,5+E	+V2 - H6						
-W118	RP	2x1,5+E	+X5 - S12						
-W119	NMHVØ	2x1,5+E	+X30 - S119						
-W120	NMHVØ	2x1,5+E	+X30 - S120						
-W121	PURFLEX	12G1,5	+X30 - +X23						
-W122	RP	3x1,5+E	+X5 - +X23						
-W123	NMHVØ	2x1,5+E	+X30 - S121						
-W124	NMHVØ	2x1,5+E	+X30 - S122						
-W125									
-W126									
-W127									
-W128	RP	3x6+E	+V1 - T2						
-W129	PURFLEX	12G1,5	+V2 - +X5						
-W130	RP	2x1,5+E	+P1 - S8						

				Date	30.01.01	MJELLEM & KARLSEN A/S M/V "SEIS RANGER"	TTS - Norlift AS MARINE CARGO GEAR	ELECTRO HYDRAULIC OFFSHORE CRANE GPCFO 2000-5020 CRANE NO.2078 CABLE LIST	Project no. 2078	=
				Drawn by:	JSB					+V1
				Approved					Scale %	Drwg no. A3-10100 / Sheet 03
Rev.	Alteration	Date	Sign.	Norm		Master drwg. / Replaces	Replased by			N.sh. —

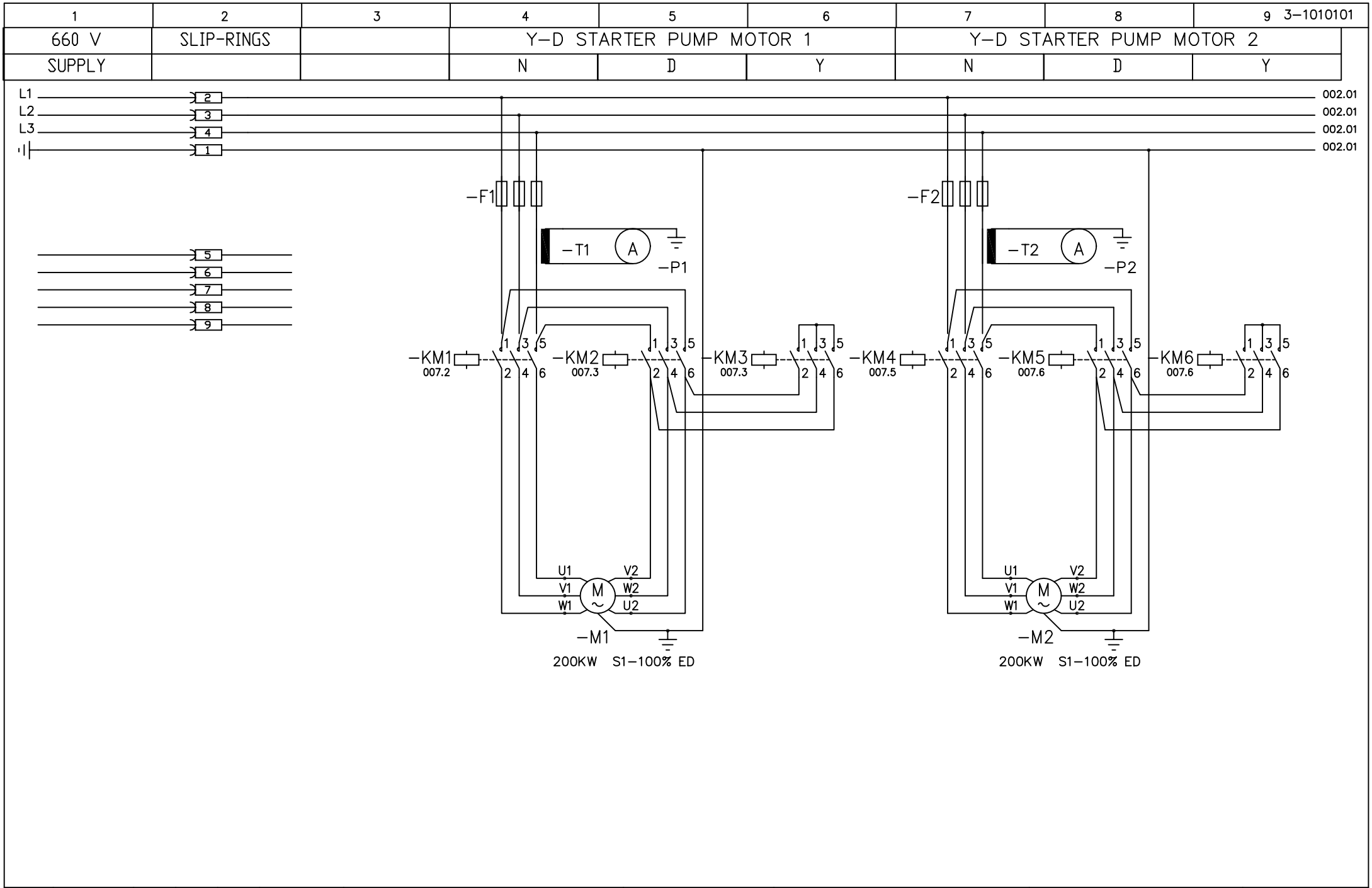

				Date	30.01.01	MJELLEM & KARLSEN A/S M/V "SEIS RANGER"		TTS - Norlift AS MARINE CARGO GEAR	ELECTRO HYDRAULIC OFFSHORE CRANE GPCFO 2000-5020 CRANE NO.2078 MAIN CIRCUIT DIAGRAM	Project no. 2078		=	
				Drawn by:	JSB							+V1	
				Approved						Scale %	Drwg no. A3-10101		Sheet 01
Rev.	Alteration	Date	Sign.	Norm		Master drwg.	Replaces	Replased by					N.sh. 02

1	2	3	4	5	6	7	8	9 3-1010102
	HYDR/GEAR OIL		HYDR.OIL COOLER	HYDR.OIL COOLER	TRANSFORMER			
	COOLER MOTOR M4		MOTOR M6	MOTOR M5	CONTROL VOLTAGE			

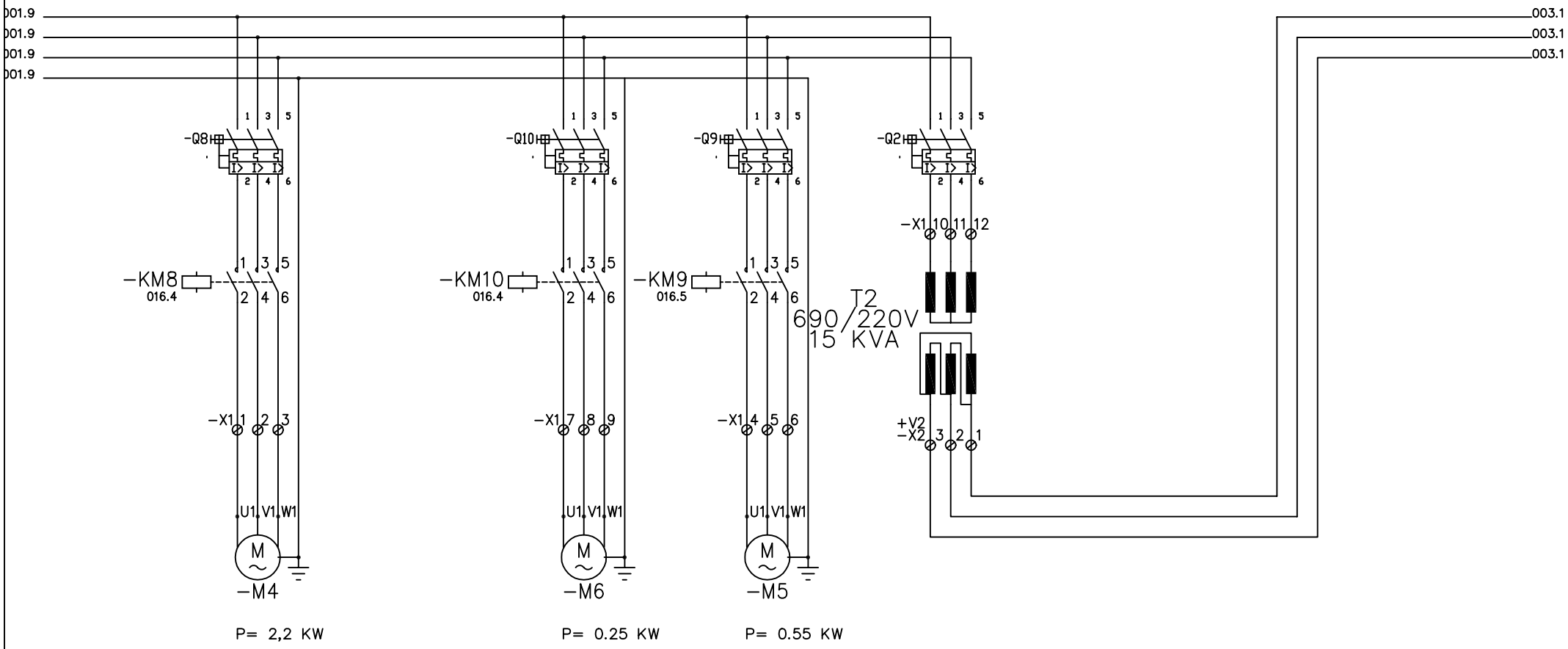

				Date	30.01.01	MJELLEM & KARLSEN VERFT A/S M/V "SEIS RANGER"	TTS - Norlift AS MARINE CARGO GEAR	ELECTRO HYDRAULIC OFFSHORE CRANE GPCFO 2000-5020 CRANE NO.2078 MAIN CIRCUIT DIAGRAM	Project no. 2078		=	
				Drawn by:	JSB						+V1	
				Approved					Scale %	Drwg no. A3-10101		Sheet 02
Rev.	Alteration	Date	Sign.	Norm		Master drwg.	Replaces	Replased by				N.sh. 03

1	2	3	4	5	6	7	8	9 3-1010103
AIR CONDITION	LIGHT IN CRANE/PEDESTAL	SOCKET OUTLET CRANE H.	HEATER IN PUMP MOTOR 1	HEATER IN PUMP MOTOR 2	HEATER IN FAN MOTOR M4	HEATER IN FAN MOTOR M5	HEATER IN FAN MOTOR M6	LUFF/HOIST HEATER

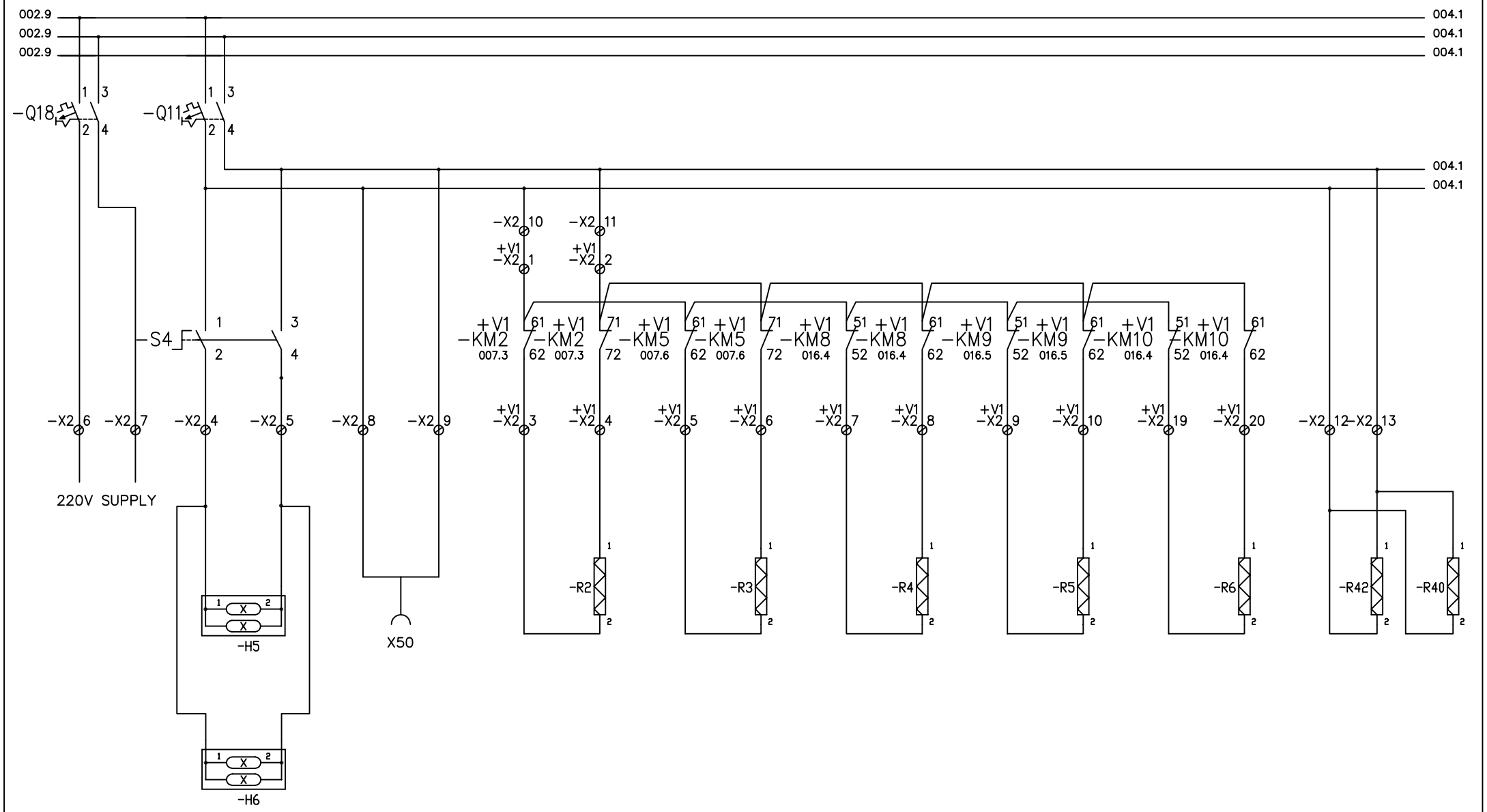

				Date	30.01.01	MJELLEM & KARLSEN VERFT A/S M/V "SEIS RANGER"		TTS - Norlift AS MARINE CARGO GEAR	ELECTRO HYDRAULIC OFFSHORE CRANE GPCFO 2000-5020 CRANE NO.2078 LIGHT AND HEATING DIAGRAM	Project no. 2078		= +V2
				Drawn by:	JSB					Scale %	Drwg no. A3-10101	Sheet 03
				Approved								N.sh. 04
Rev.	Alteration	Date	Sign.	Norm		Master drwg.	Replaces	Replased by				

1	2	3	4	5	6	7	8	9 3-1010104
HEATER AUX.HOIST	FLOODLIGHT	FLOODLIGHT	FLOODLIGHT	LIGHT	HEATER	CONTROL	DC-	DC-
LIMIT SWITCH	ON CABIN	ON FOLDING JIB	ON JIB	IN CABIN	IN CABIN	POWER	SUPPLY	SUPPLY

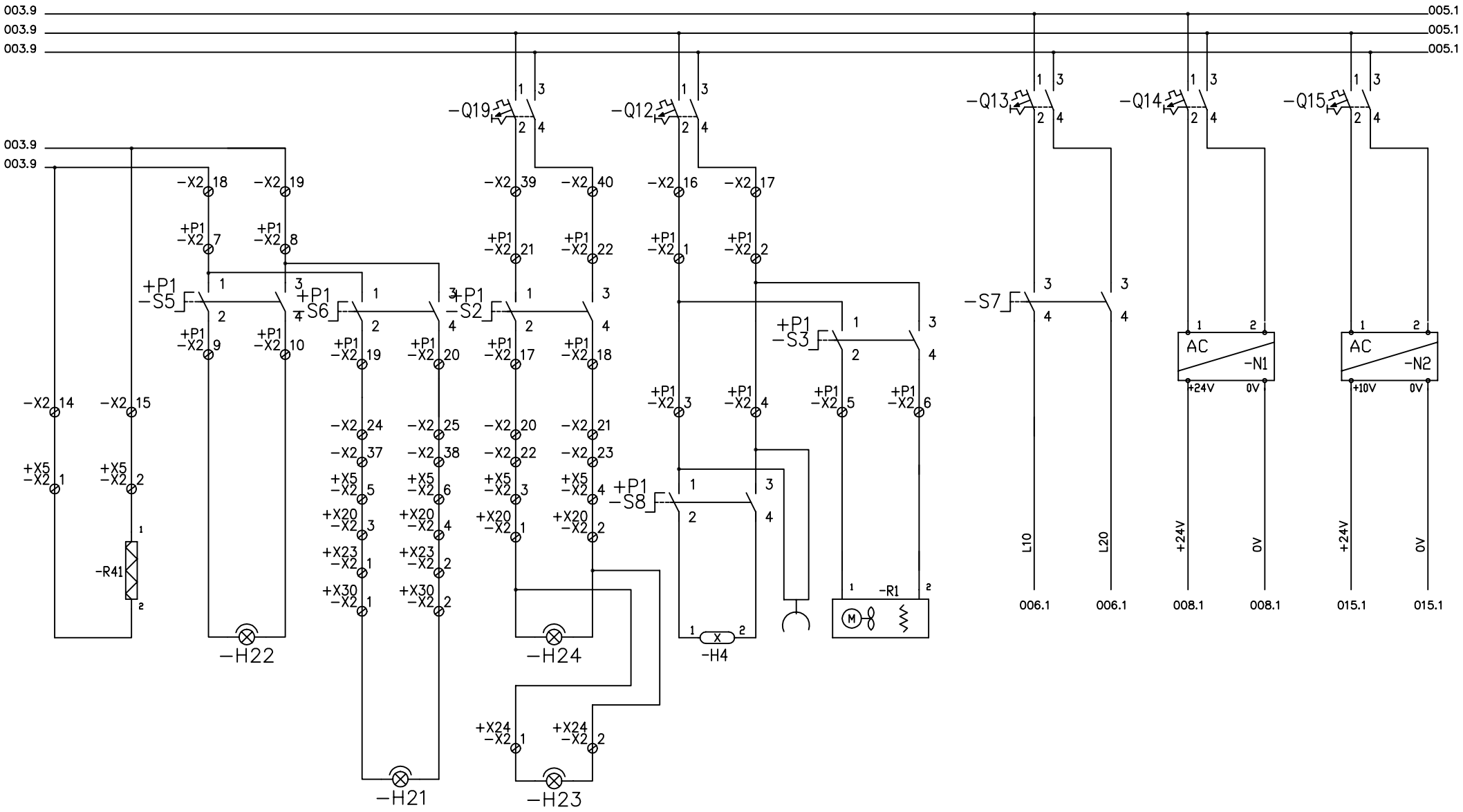

				Date	30.01.01	MJELLEM & KARLSEN VERFT A/S M/V "SEIS RANGER"	TTS - Norlift AS MARINE CARGO GEAR	ELECTRO HYDRAULIC OFFSHORE CRANE GPCFO 2000-5020 CRANE NO.2078 CONTROL CIRCUIT DIAGRAM	Project no. 2078	=	
				Drawn by:	JSB					+V2	
				Approved					Scale %	Drwg no. A3-10101	Sheet 04
Rev.	Alteration	Date	Sign.	Norm		Master drwg.	Replaces	Replased by			N.sh. 05

1	2	3	4	5	6	7	8	9 3-1010105
	24V		WINDOW	WINDOW	WINDOW	WINDOW	WINDOW	WINDOW
	DC-SUPPLY		WIPER 1	WASHER 1	WIPER 2	WASHER 2	WASHER/WIPER 3	WASHER/WIPER 4

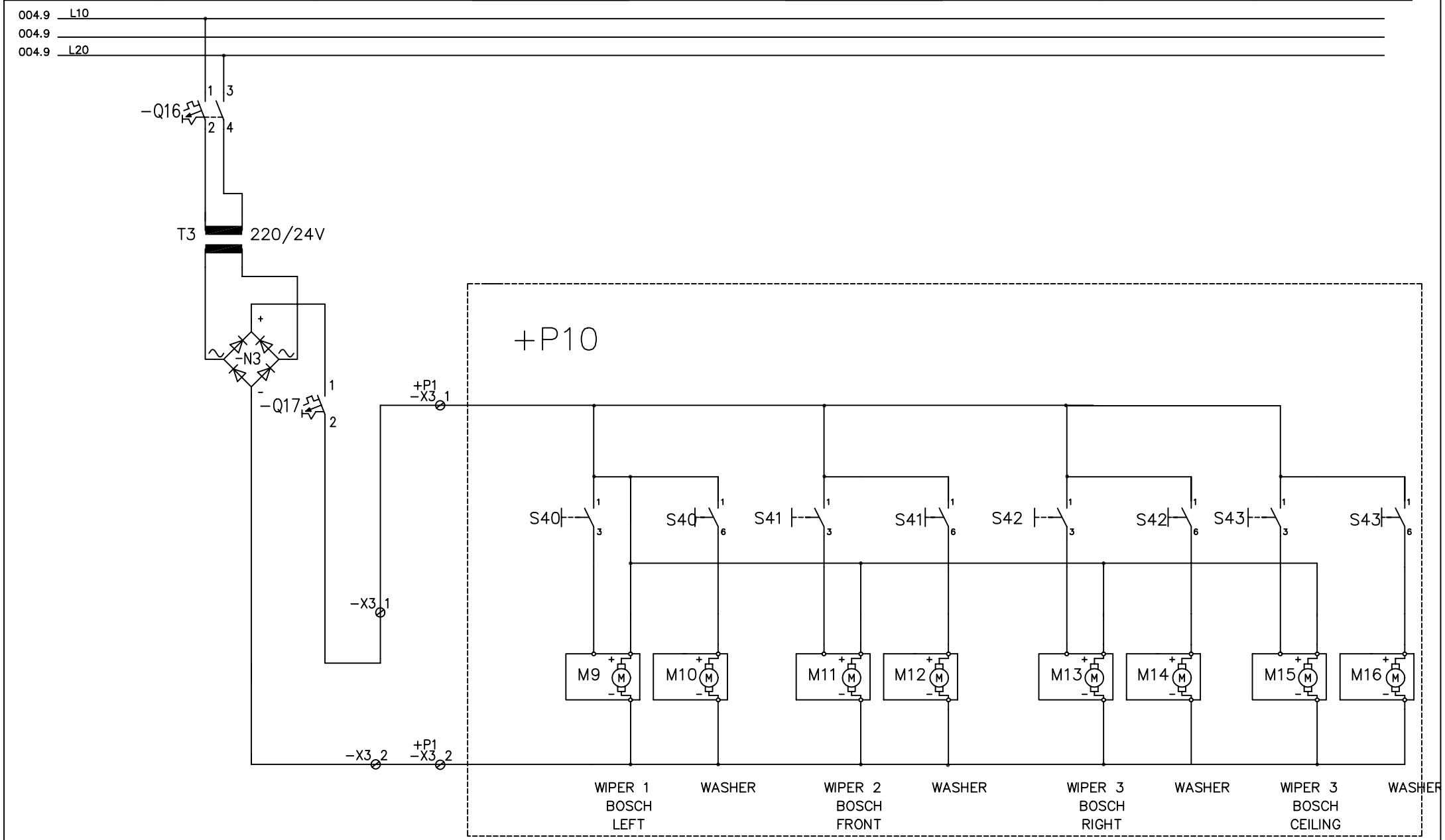

				Date	30.01.01	MJELLEM & KARLSEN VERFT A/S M/V "SEIS RANGER"	TTS - Norlift AS MARINE CARGO GEAR	ELECTRO HYDRAULIC OFFSHORE CRANE GPCFO 2000-5020 CRANE NO.2078 WINDOW WIPERS	Project no. 2078	=		
				Drawn by:	JSB					+V2		
				Approved					Scale %	Drwg no. A3-10101	Sheet 05	
Rev.	Alteration	Date	Sign.	Norm		Master drwg.	Replaces	Replased by			N.sh. 06	

1	2	3	4		5	6	7	8	9 3-1010106
220V SUPPLY	THERMISTOR	THERMISTOR	POWER	POWER		HYDR. OIL	GEAR OIL	GEAR OIL	
PLC	RELAY MOTOR 1	RELAY MOTOR 2	AVAIL.	OFF		TEMP.	TEMP. P1	TEMP. P2	

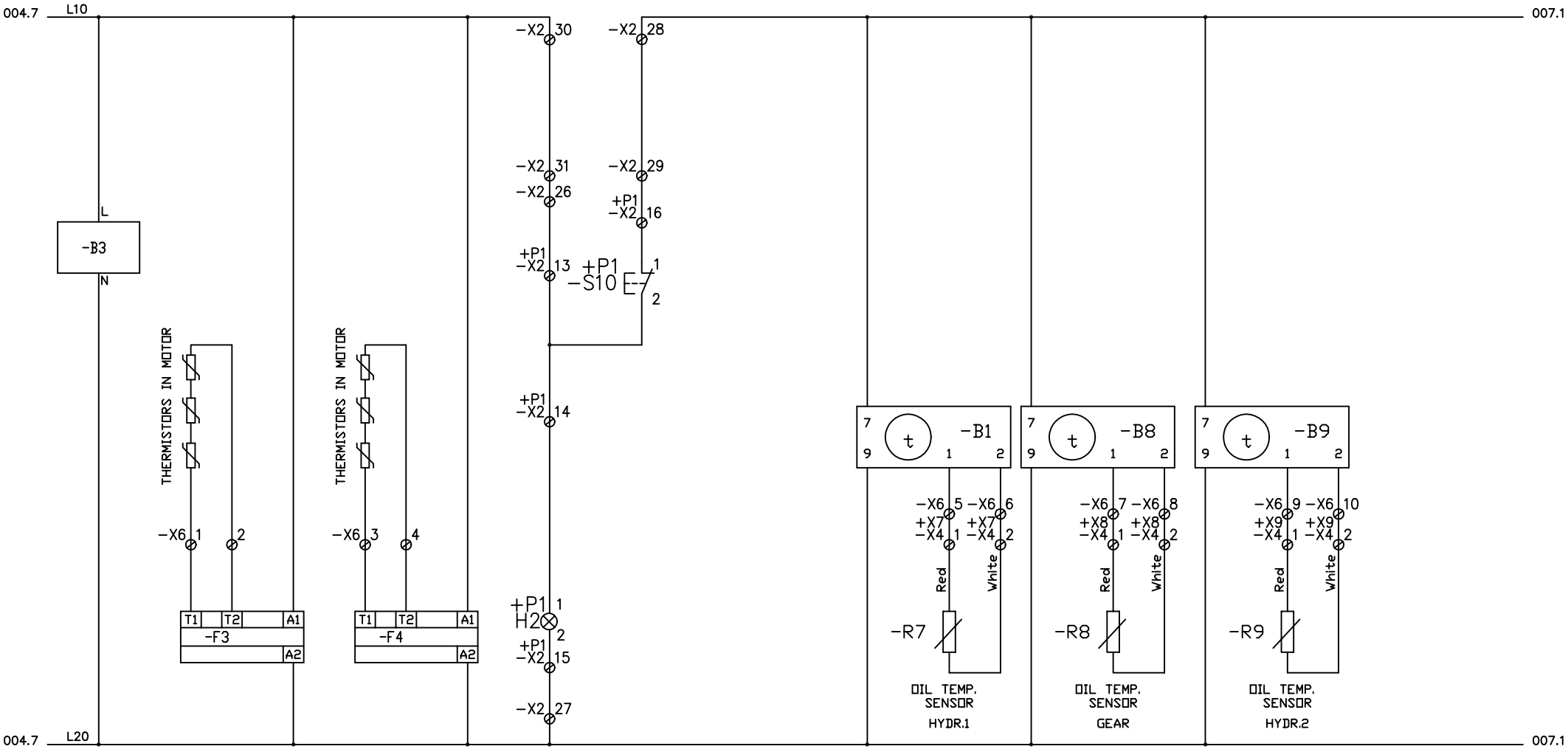

				Date	30.01.01	MJELLEM & KARLSEN VERFT A/S M/V "SEIS RANGER"		TTS - Norlift AS MARINE CARGO GEAR	ELECTRO HYDRAULIC OFFSHORE CRANE GPCFO 2000-5020 CRANE NO.2078 CONTROL CIRCUIT DIAGRAM	Project no. 2078		=
				Drawn by:	JSB							+V2
				Approved						Scale %	Drwg no. A3-10101	Sheet 06
Rev.	Alteration	Date	Sign.	Norm		Master drwg.	Replaces	Replased by				N.sh. 07

1	2	3	4	5	6	7	8	9 3-1010107
	Y-D STARTER			Y-D STARTER				
	MOTOR 1			MOTOR 2				

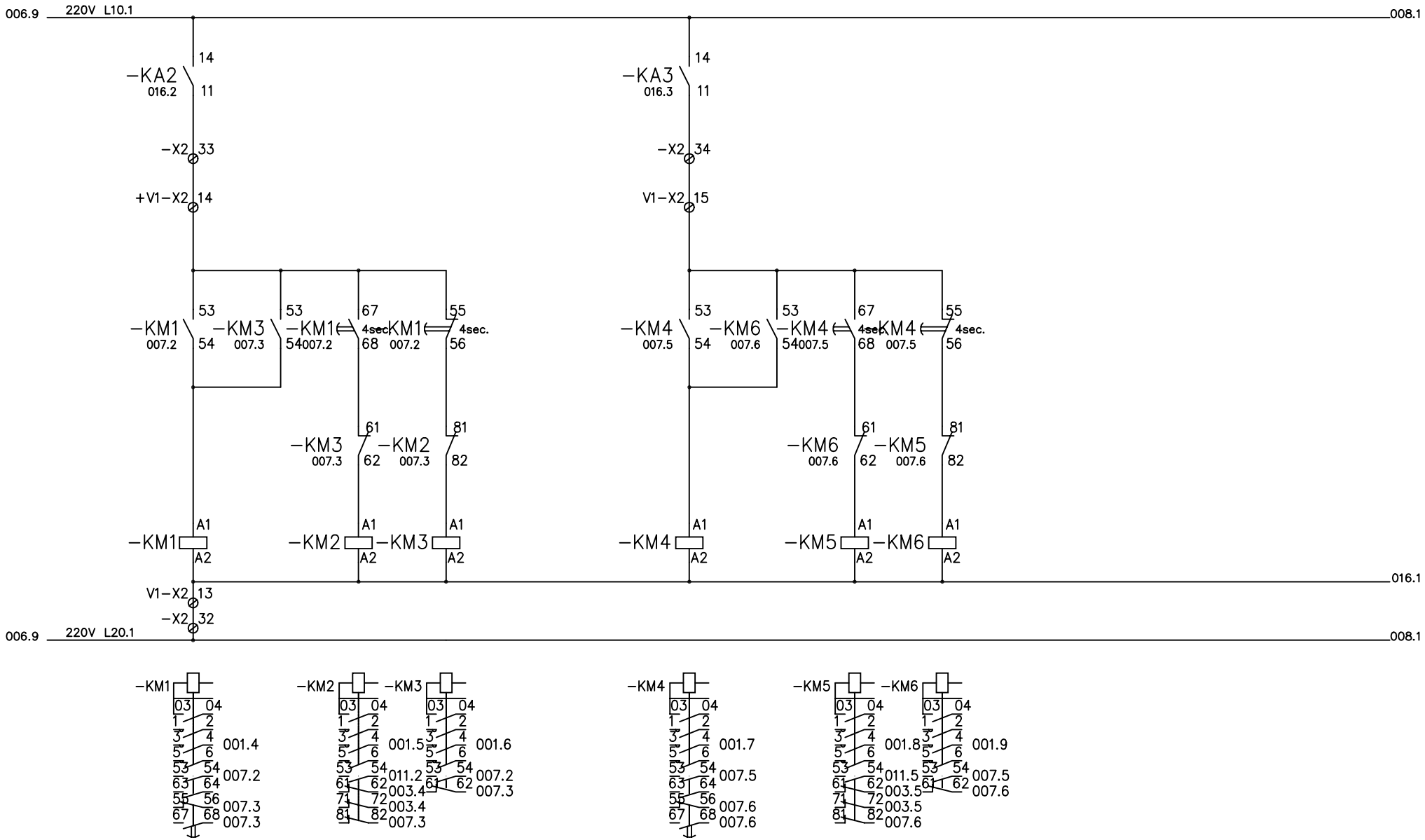

				Date	30.01.01	MJELLEM & KARLSEN A/S M/V "SEIS RANGER"		TTS - Norlift AS MARINE CARGO GEAR	ELECTRO HYDRAULIC OFFSHORE CRANE GPCFO 2000-5020 CRANE NO.2078 MOTORSTARTERS	Project no. 2078		=
				Drawn by	JSB							+V2
				Approved						Scale %	Drwg no. A3-10101	Sheet 07
Rev.	Alteration	Date	Sign.	Norm		Master drwg.	Replaces	Replased by				N.sh. 08

1	2	3	4	5	6	7	8	9 3-1010108
				LENGTH				LENGHT
				TRANSM.M.WINCH				TRANSM.AUX.WINCH

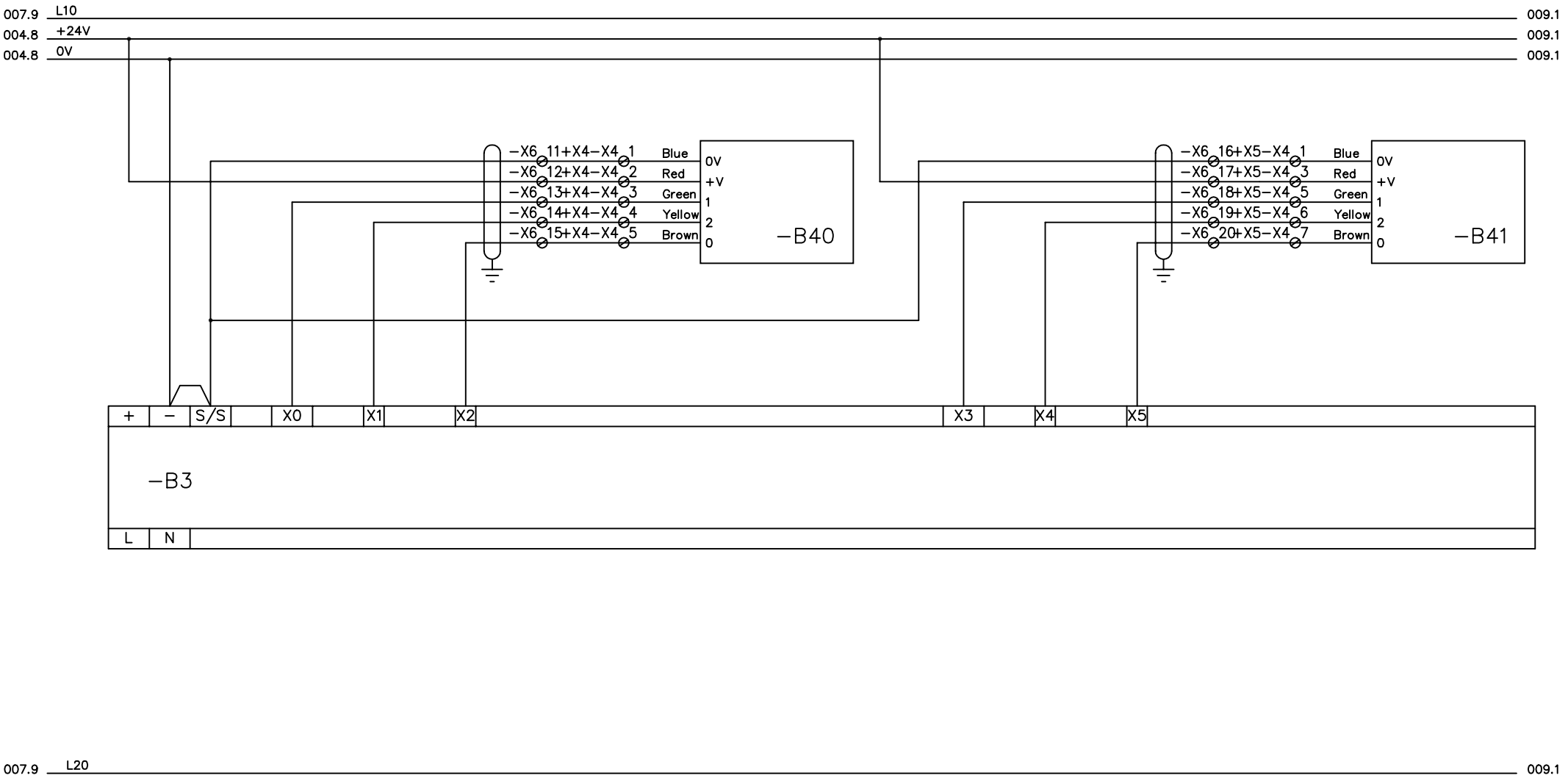

				Date	30.01.01	MJELLEM & KARLSEN A/S M/V "SEIS RANGER"	TTS - Norlift AS MARINE CARGO GEAR	ELECTRO HYDRAULIC OFFSHORE CRANE GPCFO 2000-5020 CRANE NO.2078 CONTROL CIRCUIT DIAGRAM	Project no. 2078		=	
				Drawn by	JSB						+V2	
				Approved					Scale %	Drwg no. A3-10101		Sheet 08
Rev.	Alteration	Date	Sign.	Norm		Master drwg.	Replaces	Replased by				N.sh. 09

1	2	3	4	5	6	7	8	9
				DISPLAY				
				IN CABIN				

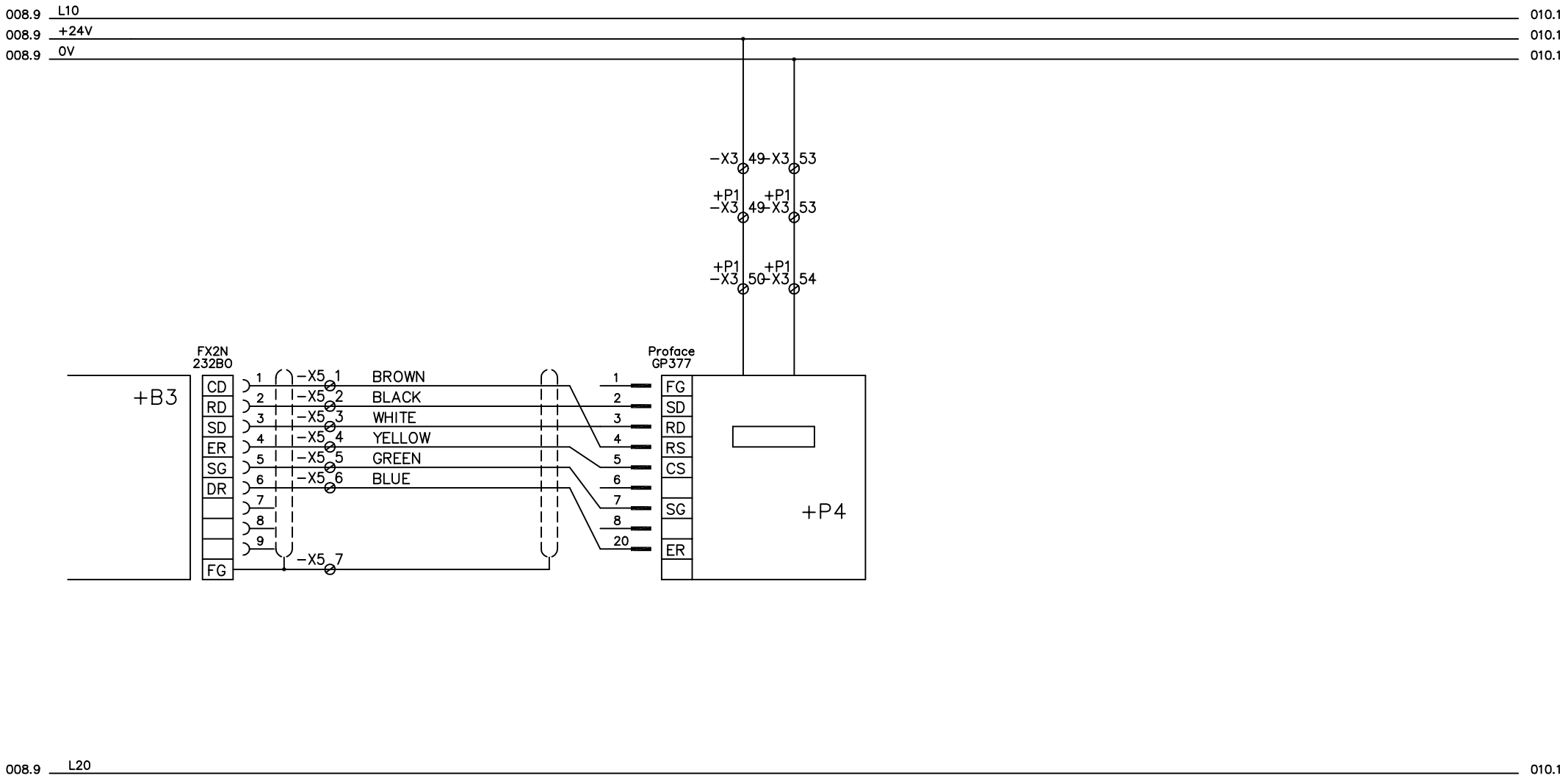

				Date	30.01.01	MJELLEM & KARLSEN VERFT A/S M/V "SEIS RANGER"	TTS - Norlift AS MARINE CARGO GEAR	ELECTRO HYDRAULIC OFFSHORE CRANE GPCFO 2000-5020 CRANE NO.2078 CONTROL CIRCUIT DIAGRAM	Project no. 2078	= +V2		
				Drawn by:	JSB							
				Approved					Scale %	Drwg no. A3-10101		Sheet 09
Rev.	Alteration	Date	Sign.	Norm		Master drwg.	Replaces	Replased by				N.sh. 10

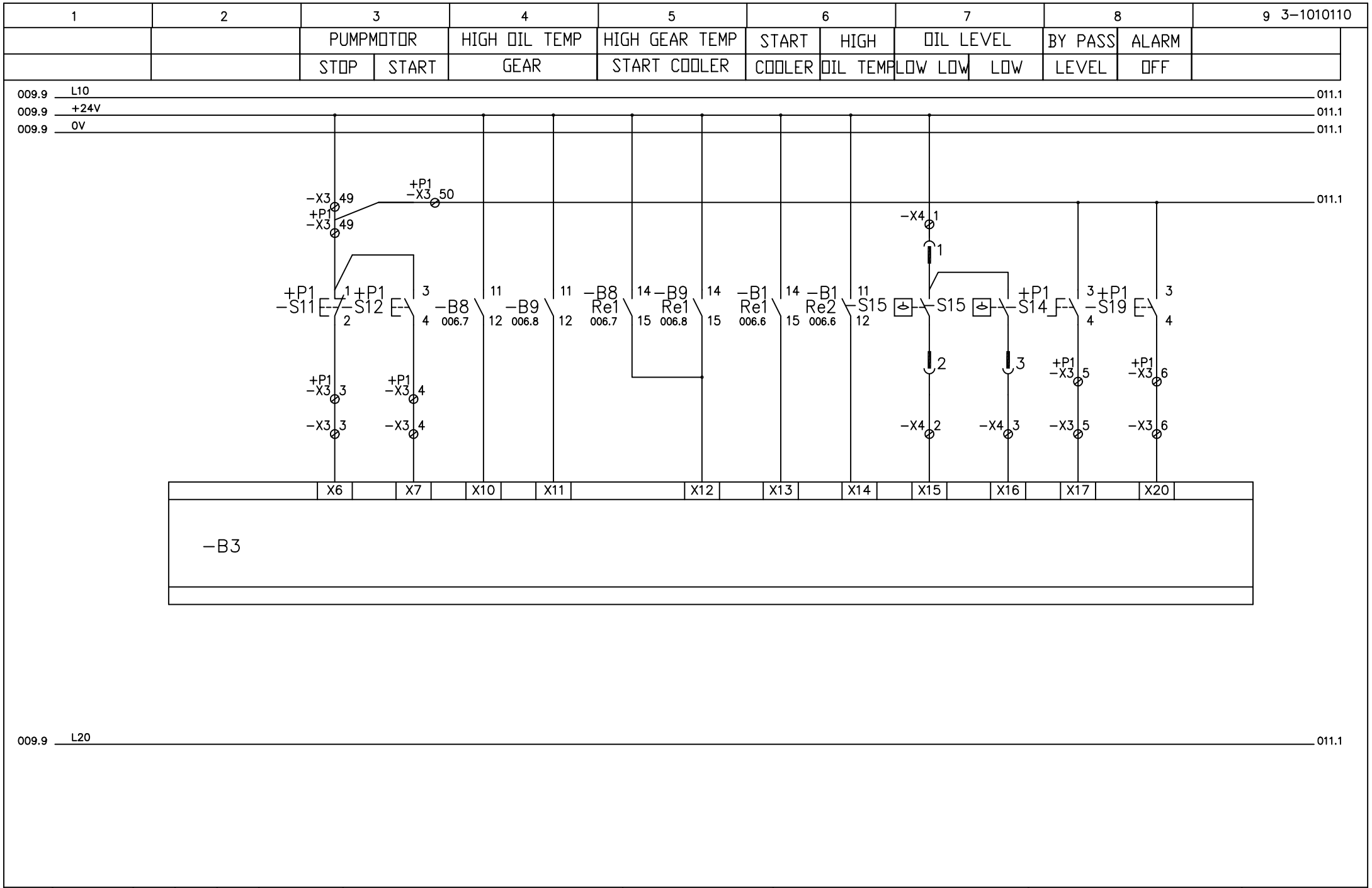
1
2
3
4
5
6
7
8
9 3-1010110
PUMPMOTOR
STOP
START
HIGH OIL TEMP
GEAR
HIGH GEAR TEMP
START COOLER
START
COOLER
HIGH
OIL TEMP
OIL LEVEL
LOW LOW
LOW
BY PASS
LEVEL
ALARM
OFF
009.9 L10
009.9 +24V
009.9 0V
011.1
-X3 49
+P1 -X3 50
+P1 -X3 49
-X4 1
+P1 -S11
+P1 -S12
-B8 006.7
-B9 006.8
-B8 Re1 006.7
-B9 Re1 006.8
-B1 Re1 006.6
-B1 Re2 006.6
-S15
+P1 -S14
+P1 -S19
+P1 -X3 3
+P1 -X3 4
-X3 3
-X3 4
-X4 2
-X4 3
+P1 -X3 5
+P1 -X3 6
-X3 5
-X3 6
X6
X7
X10
X11
X12
X13
X14
X15
X16
X17
X20
-B3
009.9 L20
Date 30.01.01
Drawn by JSB
Approved
Norm
Rev.
Alteration
Date
Sign.
MJELLEM & KARLSEN VERFT A/S
M/V "SEIS RANGER"
Master drwg.
Replaces
TTS - Norlift AS
MARINE CARGO GEAR
Replased by
ELECTRO HYDRAULIC OFFSHORE CRANE
GPCFO 2000-5020
CRANE NO.2078
CONTROL CIRCUIT DIAGRAM
Project no. 2078
=
+V2
Scale %
Drwg no. A3-10101
Sheet 10
N.sh. 11

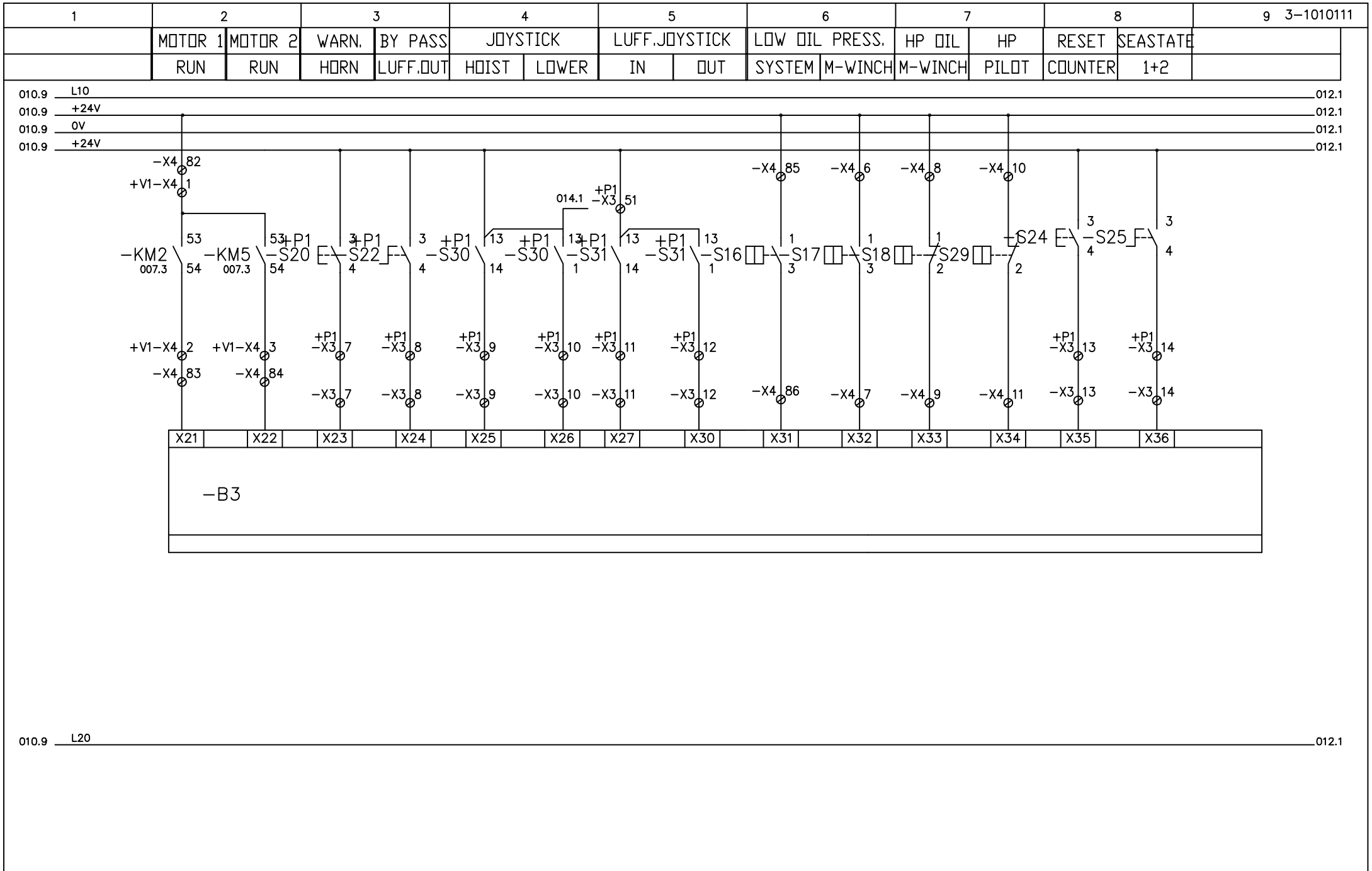

D		22.08.00	HJS	Date	30.01.01	MJELLEM & KARLSEN VERFT A/S M/V "SEIS RANGER"	TTS - Norlift AS MARINE CARGO GEAR	ELECTRO HYDRAULIC OFFSHORE CRANE GPCFO 2000-5020 CRANE NO.2078 CONTROL CIRCUIT DIAGRAM	Project no. 2078	=
C	-X10	30.05.00	NBS	Drawn by:	JSB					+V2
B	-S19,-S20	26.05.00	NBS	Approved					Scale %	Drwg no. A3-1010111	Sheet 11
Rev.	Alteration	Date	Sign.	Norm		Master drwg.	Replaces	Replased by			N.sh. 12

1	2		3		4		5		6		7		8		9 3-1010112
			LAMP		M-HOIST DOWN		M-HOIST UP		FULL STOP		STOP LUFFING		SPEED REDUCTION		STOP UP
	EMS	TENSION	TEST		STOP	SP.RED	SP.RED.	STOP	STOP		IN	OUT	IN	OUT	A-HOIST

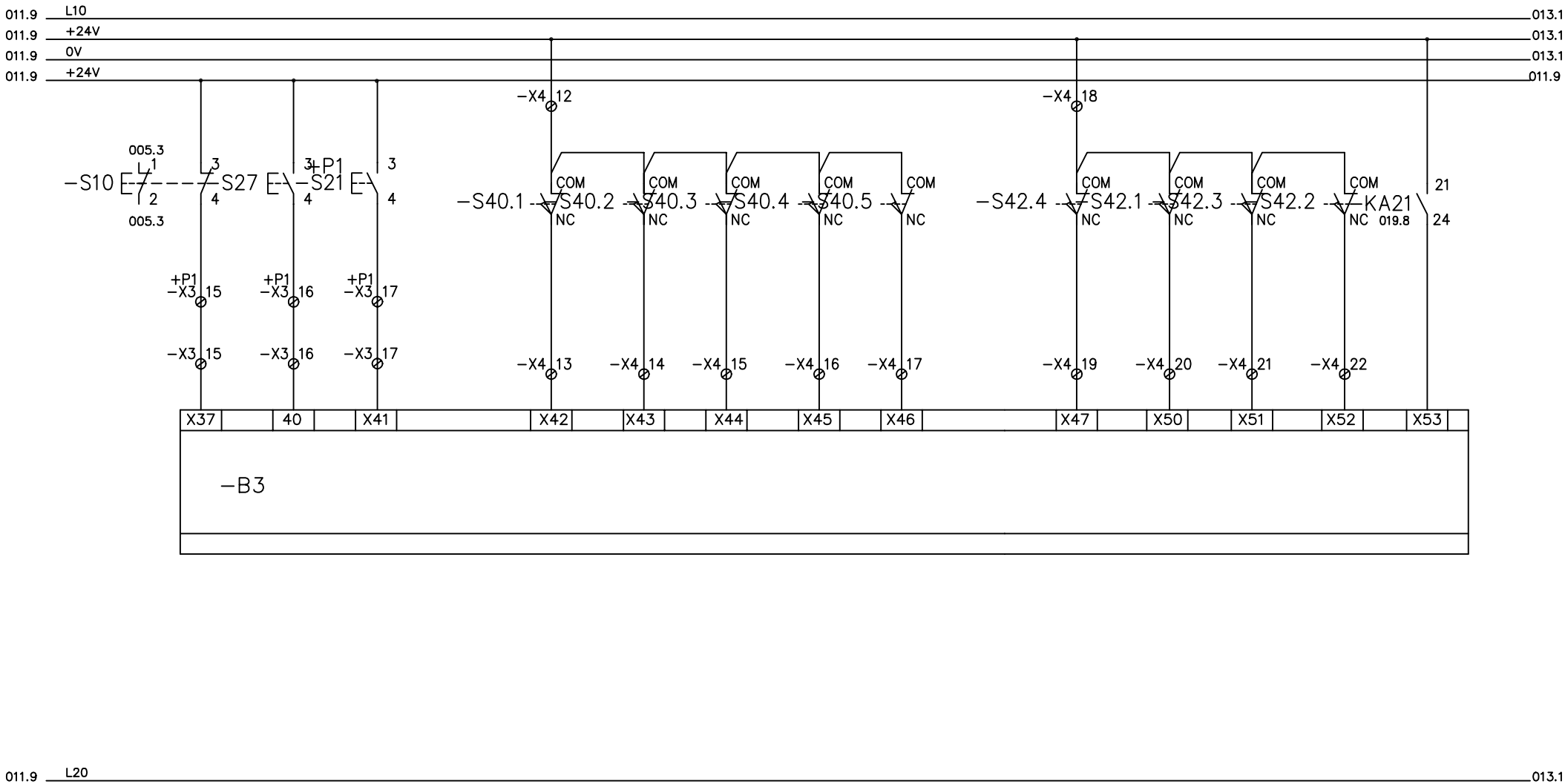

				Date	30.01.01	MJELLEM & KARLSEN VERFT A/S M/V "SEIS RANGER"		TTS - Norlift AS MARINE CARGO GEAR	ELECTRO HYDRAULIC OFFSHORE CRANE GPCFO 2000-5020 CRANE NO.2078 CONTROL CIRCUIT DIAGRAM	Project no. 2078		=
				Drawn by	JSB							+V2
A		12.06.01	JSB	Approved						Scale %	Drwg no. A3-10101	Sheet 12
Rev.	Alteration	Date	Sign.	Norm		Master drwg.	Replaces	Replased by				N.sh. 13

1	2		3	4		5		6	7	8	9 3-1010113
	START MOTOR		COOLING-FAN	BRAKE		HIGH MOTOR TEMP.		MAIN/AUX	EMS	LOW OIL PRESS	PRESSOSTAT
	M1	M2	MAN/AUTO	M- HOIST	A-HOIST	M1	M2	HOIST	BYPASS	AUX.WINCH	

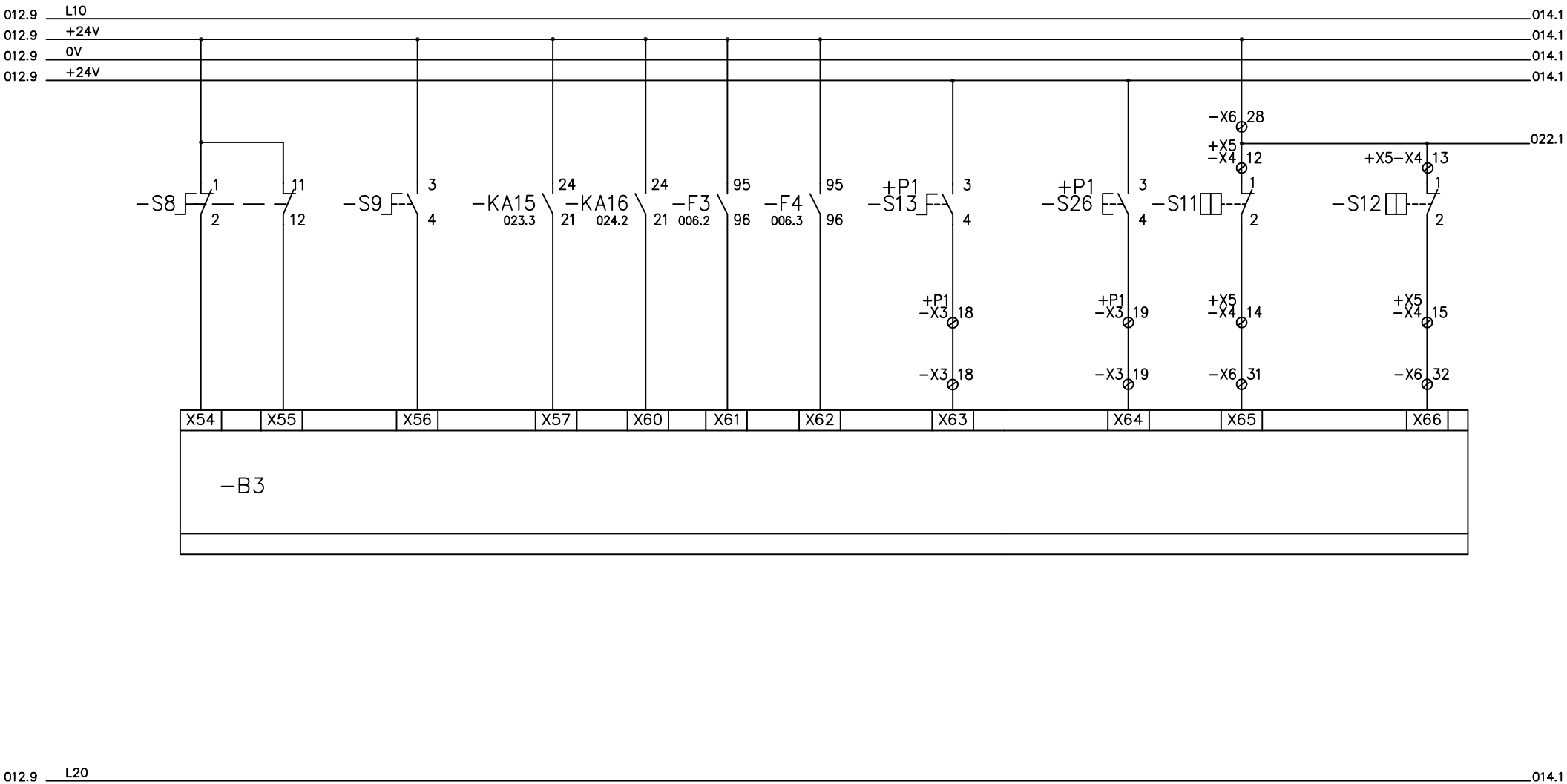

				Date	31.01.01	MJELLEM & KARLSEN VERFT A/S M/V "SEIS RANGER"		TTS - Norlift AS MARINE CARGO GEAR	ELECTRO HYDRAULIC OFFSHORE CRANE GPCFO 2000-5020 CRANE NO.2078 CONTROL CIRCUIT DIAGRAM	Project no. 2078		=	
				Drawn by:	JSB							+V2	
				Approved						Scale %	Drwg no. A3-10101		Sheet 13
Rev.	Alteration	Date	Sign.	Norm		Master drwg.	Replaces	Replased by					N.sh. 14

1	2		3		4	5	6	7	8	9 3-1010114
	FOLDING JIB		LOW OIL PRESS.		WINCH TOP SW.	WINCH TOP SW.				
	IN	OUT	PUMP 1	PUMP 2	MAIN WINCH	AUX.WINCH				

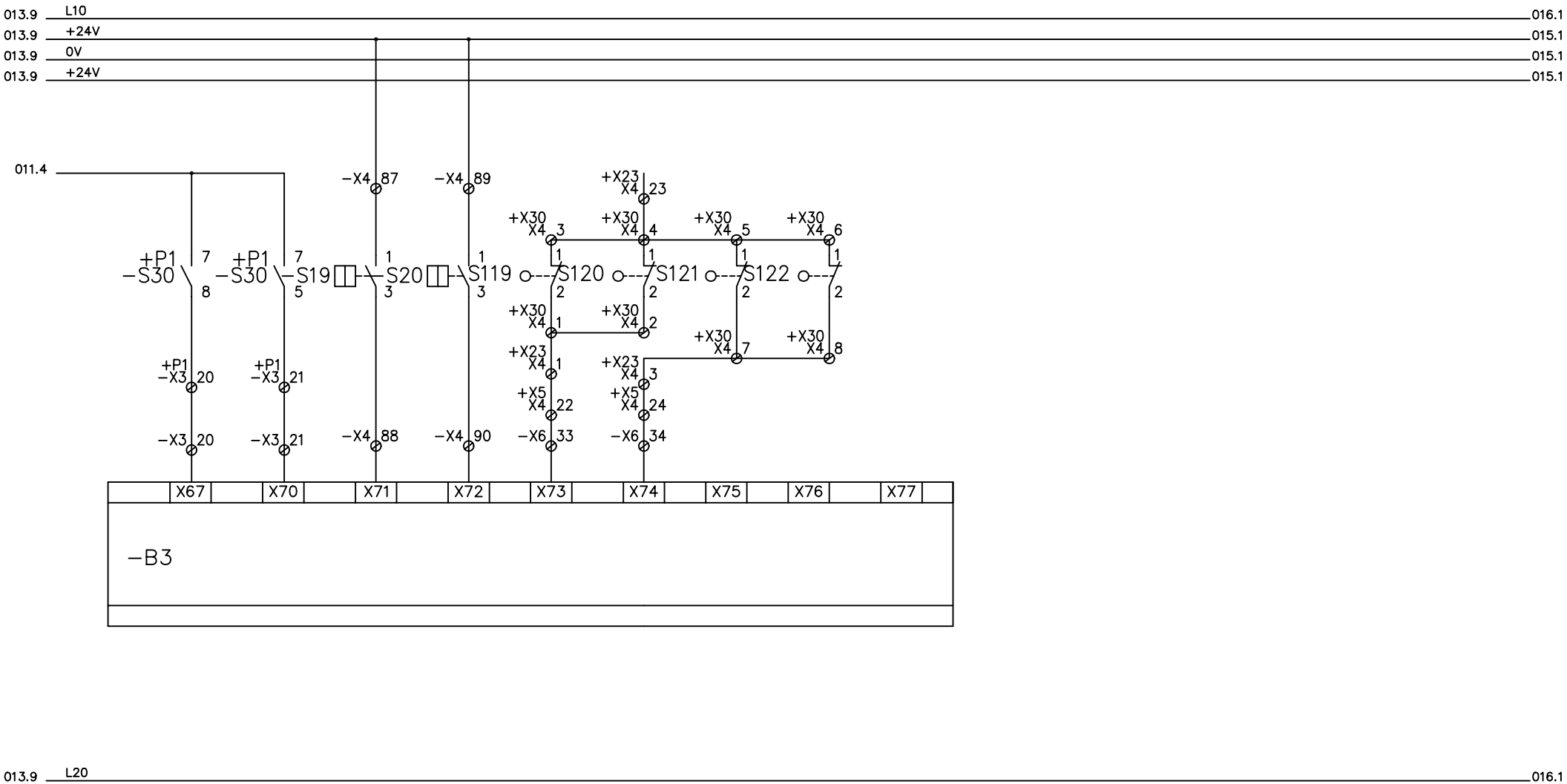

				Date	02.02.01	MJELLEM & KARLSEN VERFT A/S M/V "SEIS RANGER"		TTS - Norlift AS MARINE CARGO GEAR	ELECTRO HYDRAULIC OFFSHORE CRANE GPCFO 2000-5020 CRANE NO.2078 CONTROL CIRCUIT DIAGRAM	Project no. 2078		=	
				Drawn by	JSB							+V2	
				Approved						Scale %	Drwg no. A3-10101		Sheet 14
Rev.	Alteration	Date	Sign.	Norm		Master drwg.	Replaces	Replased by					N.sh. 15

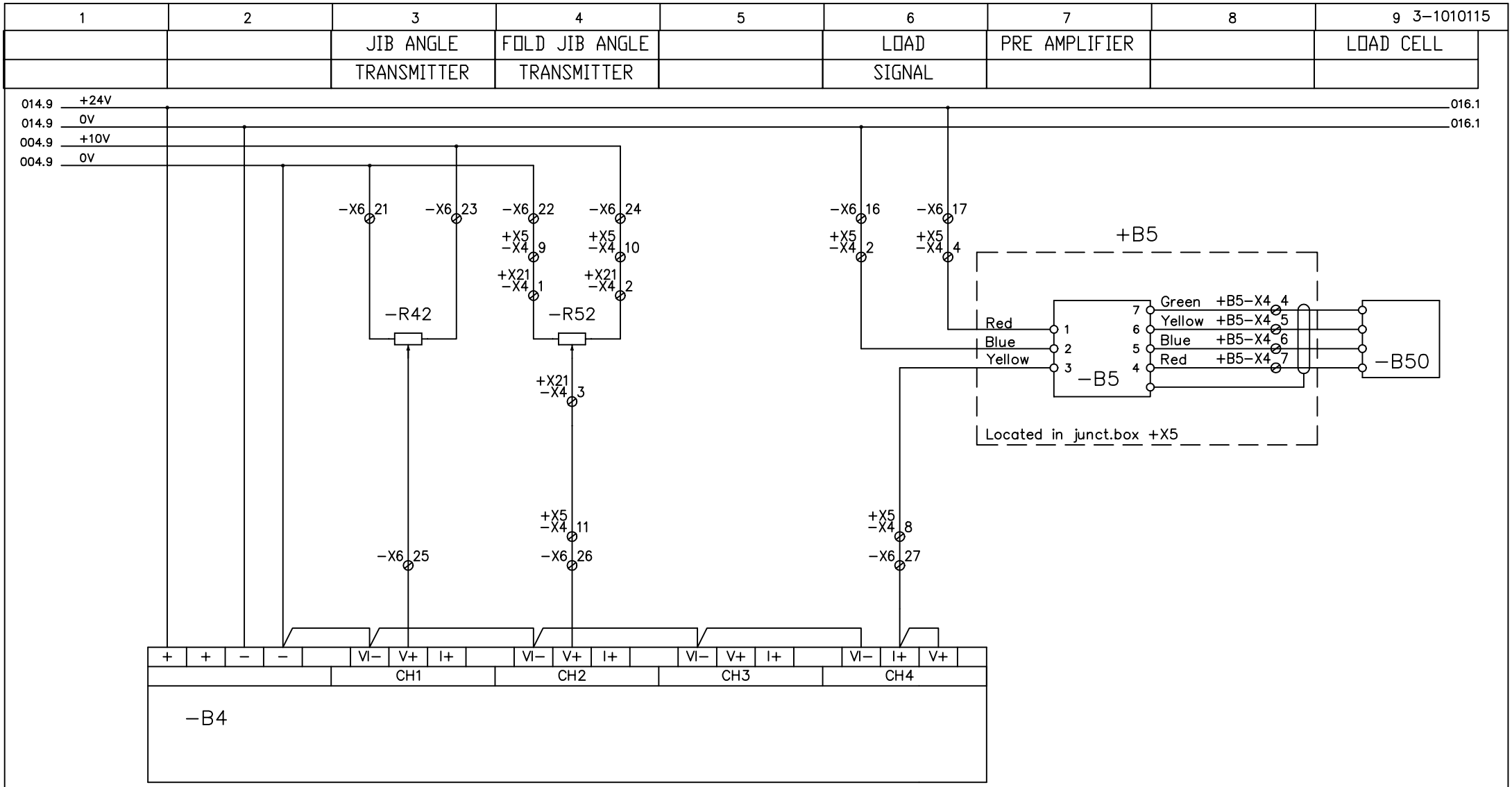

				Date	30.01.01	MJELLEM & KARLSEN VERFT A/S M/V "SEIS RANGER"		TTS - Norlift AS MARINE CARGO GEAR	ELECTRO HYDRAULIC OFFSHORE CRANE GPCFO 2000-5020 CRANE NO.2078 CONTROL CIRCUIT DIAGRAM	Project no. 2078		=
				Drawn by:	JSB							+V2
				Approved						Scale %	Drwg no. A3-10101	Sheet 15
Rev.	Alteration	Date	Sign.	Norm		Master drwg.	Replaces	Replased by				N.sh. 16

1	2		3		4	5	6	7	8	9
	HOUR	PUMP	HOUR	PUMP	OIL COOLER	OIL COOLER	24V DC			
	METER	MOTOR 1	METER	MOTOR 2	MOTOR 1	MOTOR 2	ON			

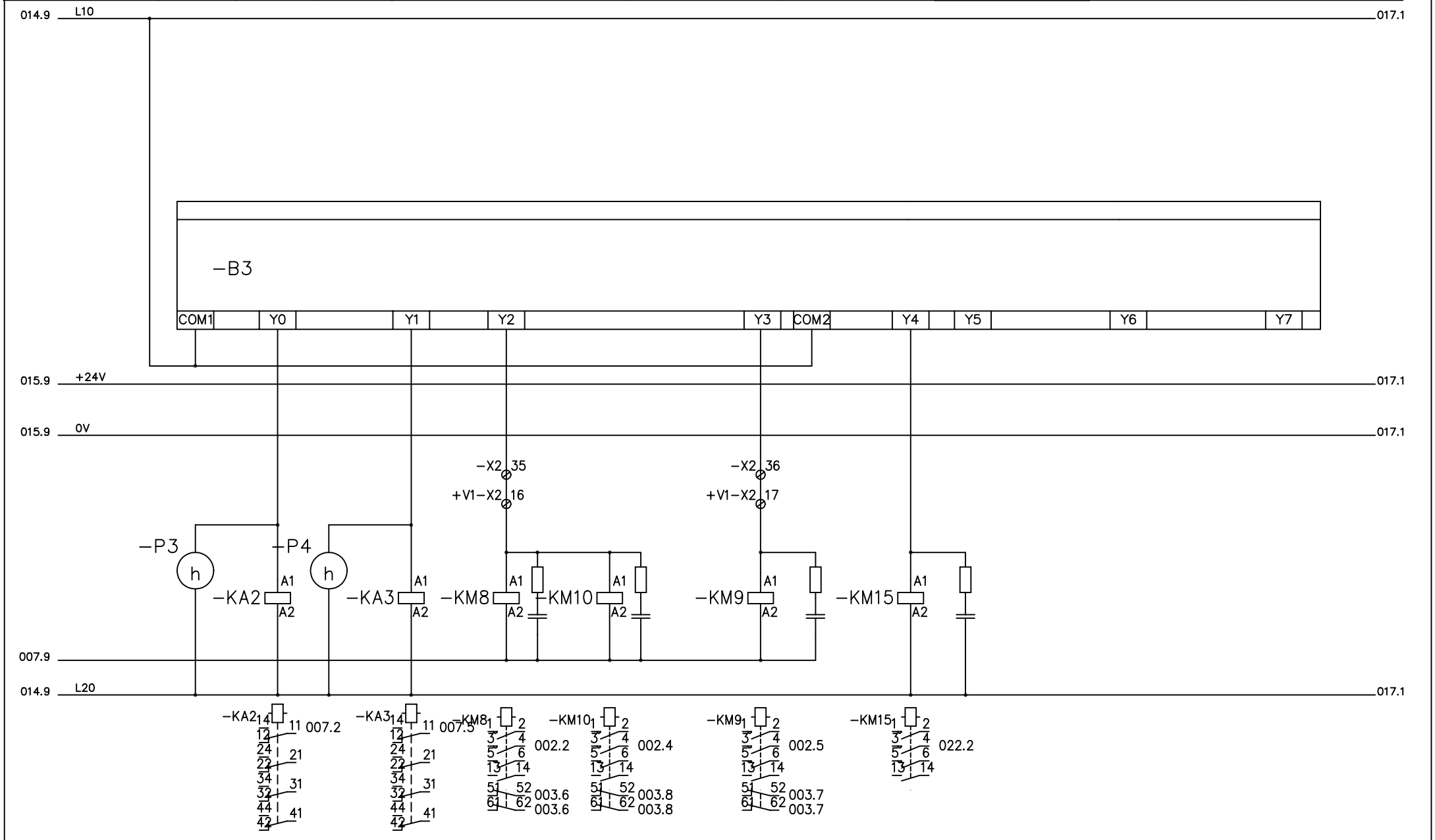

				Date	30.01.01	MJELLEM & KARLSEN VERFT A/S M/V "SEIS RANGER"	TTS - Norlift AS MARINE CARGO GEAR	ELECTRO HYDRAULIC OFFSHORE CRANE GPCFO 2000-5020 CRANE NO.2078 CONTROL CIRCUIT DIAGRAM	Project no. 2078	=	
				Drawn by:	JSB					+V2	
				Approved					Scale %	Drwg no. A3-10101	Sheet 16
Rev.	Alteration	Date	Sign.	Norm		Master drwg.	Replaces	Replased by			N.sh. 17

1	2		3		4	5		6		7	8	9 3-1010117
	SPEED RED.M.HOIST		STOP M.HOIST			SPEED RED. LUFF		STOP LUFFING		SPARE	SPARE	
	UP	DOWN	UP	DOWN		IN	OUT	IN	OUT			

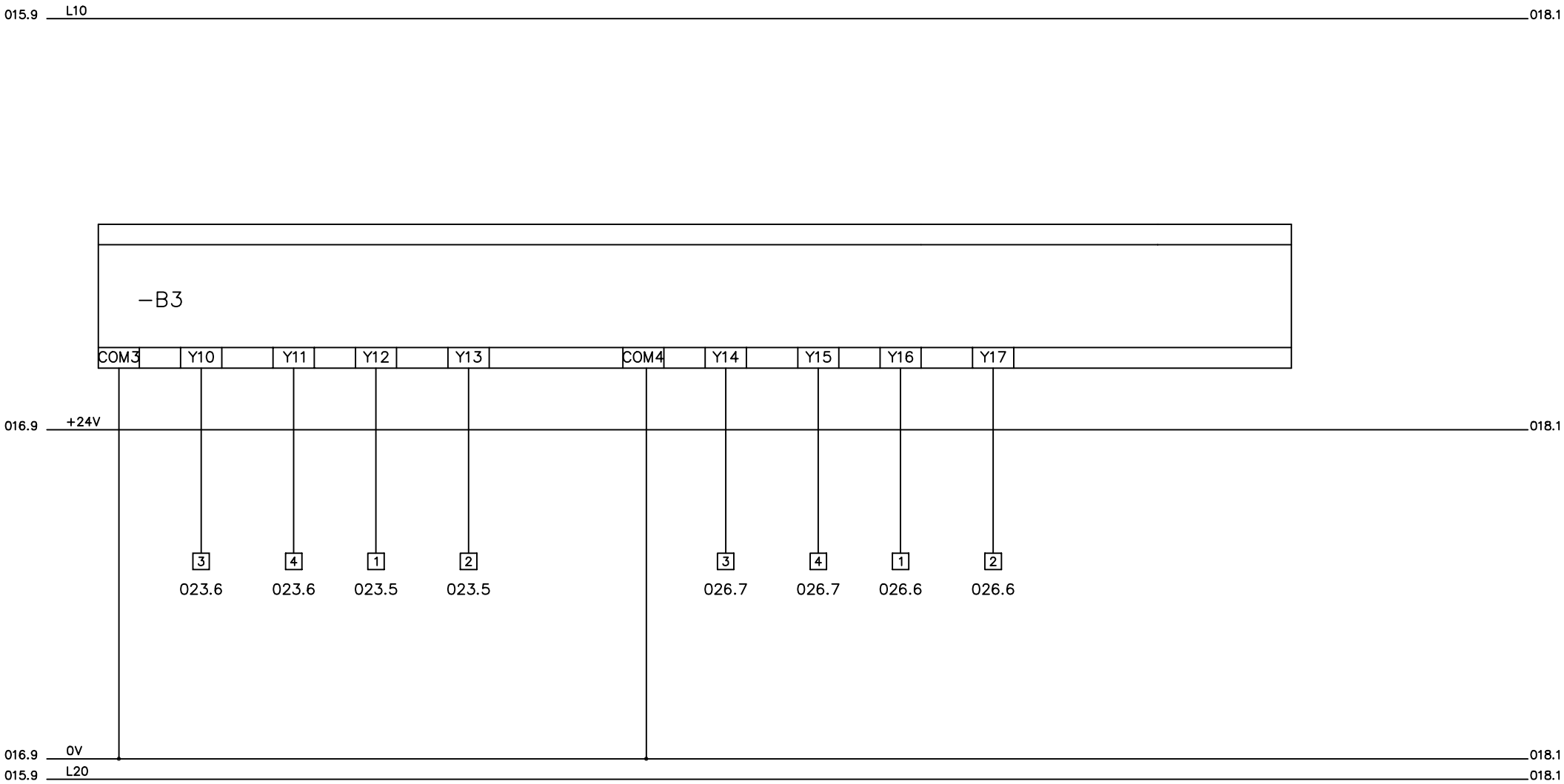

				Date	30.01.01	MJELLEM & KARLSEN VERFT A/S M/V "SEIS RANGER"	TTS - Norlift AS MARINE CARGO GEAR	ELECTRO HYDRAULIC OFFSHORE CRANE GPCFO 2000-5020 CRANE NO.2078 CONTROL CIRCUIT DIAGRAM	Project no. 2078
				Drawn by	JSB				= +V2
				Approved					Scale %
Rev.	Alteration	Date	Sign.	Norm		Master drwg.	Replaces	Replased by	Drwg no. A3-10101
									Sheet 17
									N.sh. 18

1	2		3		4		5		6	7	8		9
	CRANE	M1 HIGH	M2 HIGH	HIGH	HIGH OIL	LOW OIL	IN	WARNING		OVERLOAD	O.LOAD	SPARE	SPARE
	READY	MOT.TEMP	MOT.TEMP	GEAR T.	TEMP	LEVEL	TENSION	HORN		PREWARNING (90%)	100%		

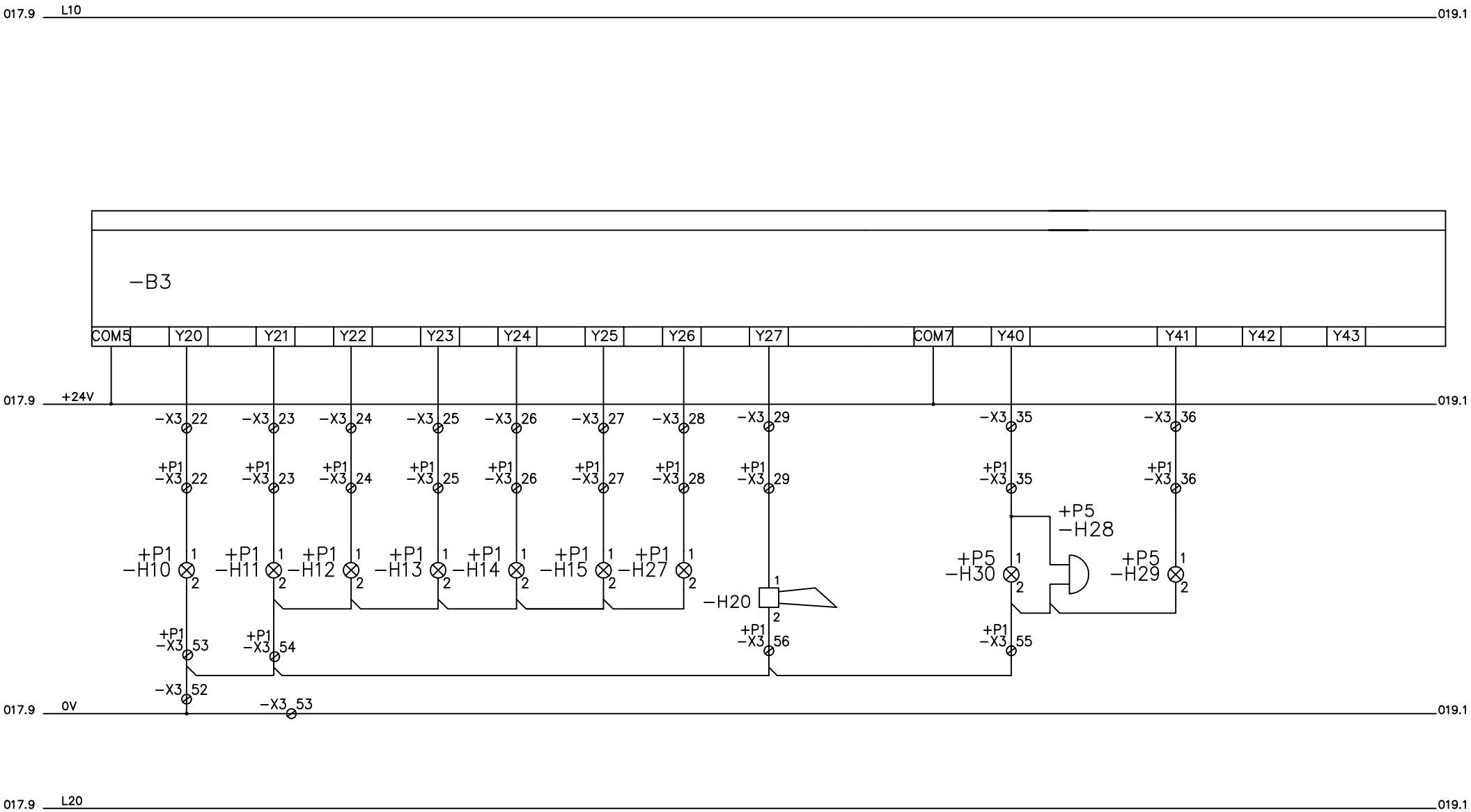

				Date	30.01.01	MJELLEM & KARLSEN VERFT A/S M/V "SEIS RANGER"		TTS - Norlift AS MARINE CARGO GEAR	ELECTRO HYDRAULIC OFFSHORE CRANE GPCFO 2000-5020 CRANE NO.2078 CONTROL CIRCUIT DIAGRAM	Project no. 2078		=	
				Drawn by:	JSB							+V2	
				Approved						Scale %	Drwg no. A3-10101		Sheet 18
Rev.	Alteration	Date	Sign.	Norm		Master drwg.	Replaces	Replased by					N.sh. 19

1	2	3		4		5		6		7		8		9
	TENSION	CB				HOIST	HOIST BRAKE		SPARE	PUMP MOTOR		BRAKE	AUX.W	
		MAIN	AUX			MAIN/AUX	MAIN	AUX		M1	M2	A-HOIST	TOP.POS	

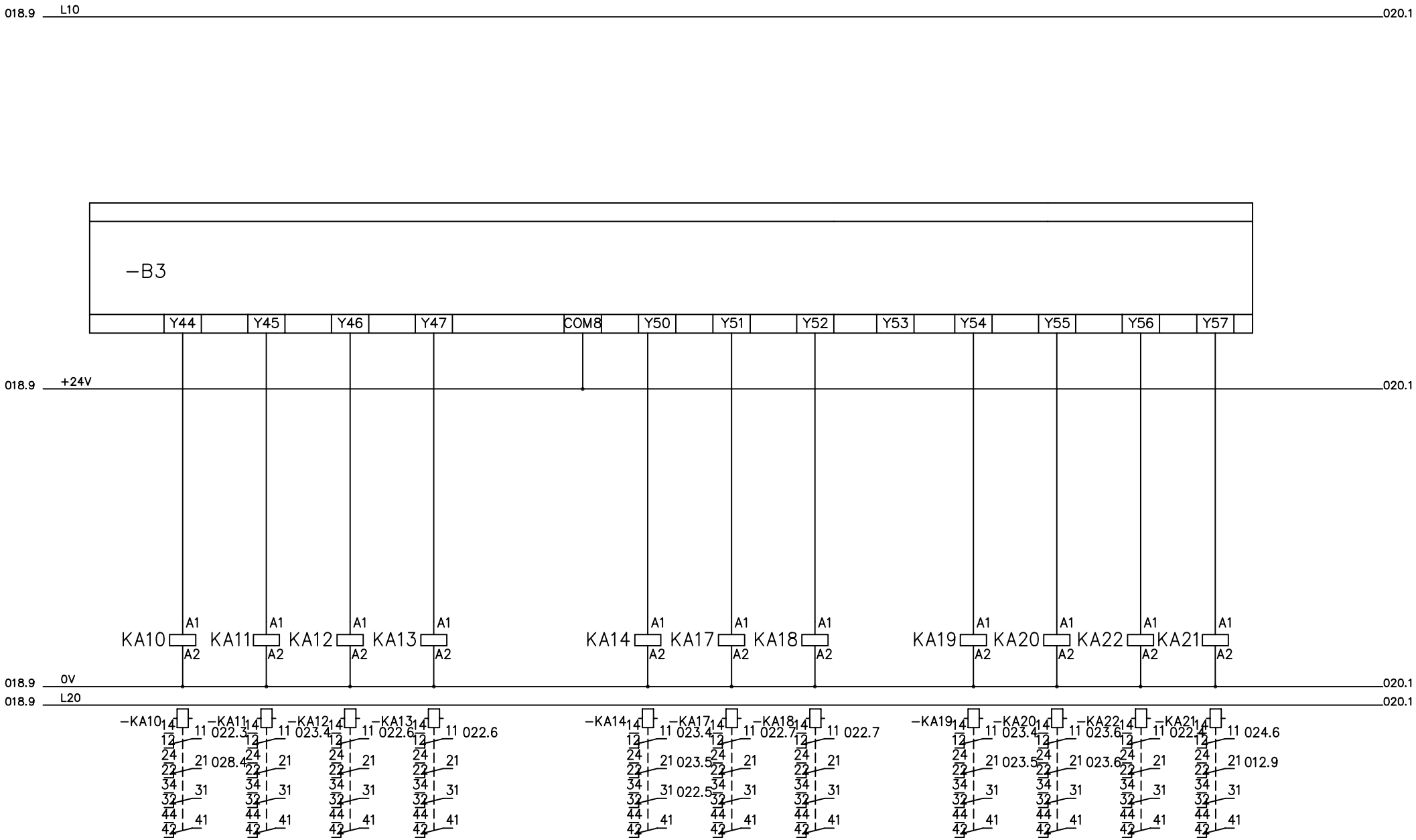

				Date	30.01.01	MJELLEM & KARLSEN VERFT A/S M/V "SEIS RANGER"		TTS - Norlift AS MARINE CARGO GEAR	ELECTRO HYDRAULIC OFFSHORE CRANE GPCFO 2000-5020 CRANE NO.2078 CONTROL CIRCUIT DIAGRAM	Project no. 2078		=
				Drawn by:	JSB							+V2
A		12.06.01	JSB	Approved						Scale %	Drwg no. A3-10101	Sheet 19
Rev.	Alteration	Date	Sign.	Norm		Master drwg.	Replaces	Replased by				N.sh. 20

1	2		3		4		5		6		7		8		9
	SPEED RED.F.JIB		STOP FOLDING JIB		SPARE		SPARE		SPARE		SPARE		SPARE		
	IN	OUT	IN	OUT											

019.9 L10 021.1

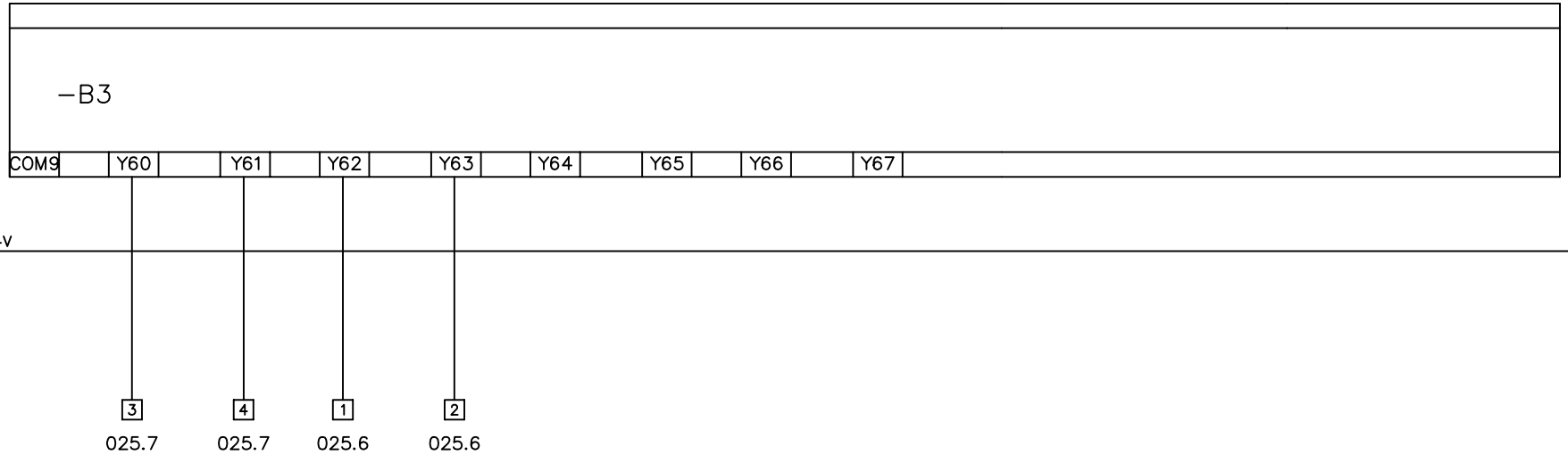

019.9 +24V 021.1

019.9 0V 021.1

019.9 L20 021.1

				Date	30.01.01	MJELLEM & KARLSEN VERFT A/S M/V "SEIS RANGER"	TTS - Norlift AS MARINE CARGO GEAR	ELECTRO HYDRAULIC OFFSHORE CRANE GPCFO 2000-5020 CRANE NO.2078 CONTROL CIRCUIT DIAGRAM	Project no. 2078	=		
				Drawn by	JSB					+V2		
				Approved					Scale %	Drwg no. A3-10101	Sheet 20	
Rev.	Alteration	Date	Sign.	Norm		Master drwg.	Replaces	Replased by			N.sh. 21	

1	2	3	4	5	6	7	8	9
	SPARE	SPARE	SPARE	SPARE				

020.9 L10

-B3

COM10	Y70	Y71	Y72	Y73	Y74	Y75	Y76	Y77

020.9 +24V 022.1

020.9 0V 022.1

020.9 L20

				Date	30.01.01	MJELLEM & KARLSEN VERFT A/S M/V "SEIS RANGER"	TTS - Norlift AS MARINE CARGO GEAR	ELECTRO HYDRAULIC OFFSHORE CRANE GPCFO 2000-5020 CRANE NO.2078 CONTROL CIRCUIT DIAGRAM
				Drawn by:	JSB			
				Approved				
Rev.	Alteration	Date	Sign.	Norm		Master drwg.	Replaces	Replased by

Project no. 2078		= +V2
Scale %	Drwg no. A3-10101	Sheet 21 N.sh. 22

1	2	3	4		5	6		7		8	9
	DC-SUPPLY	SOLENOID VALVE	HOIST BRAKE		AUX.WINCH	CB		DUMP VALVES			
		TENSION	MAIN	AUX.	SELECT	MAIN	AUX.	MAIN W.	AUX. W.		

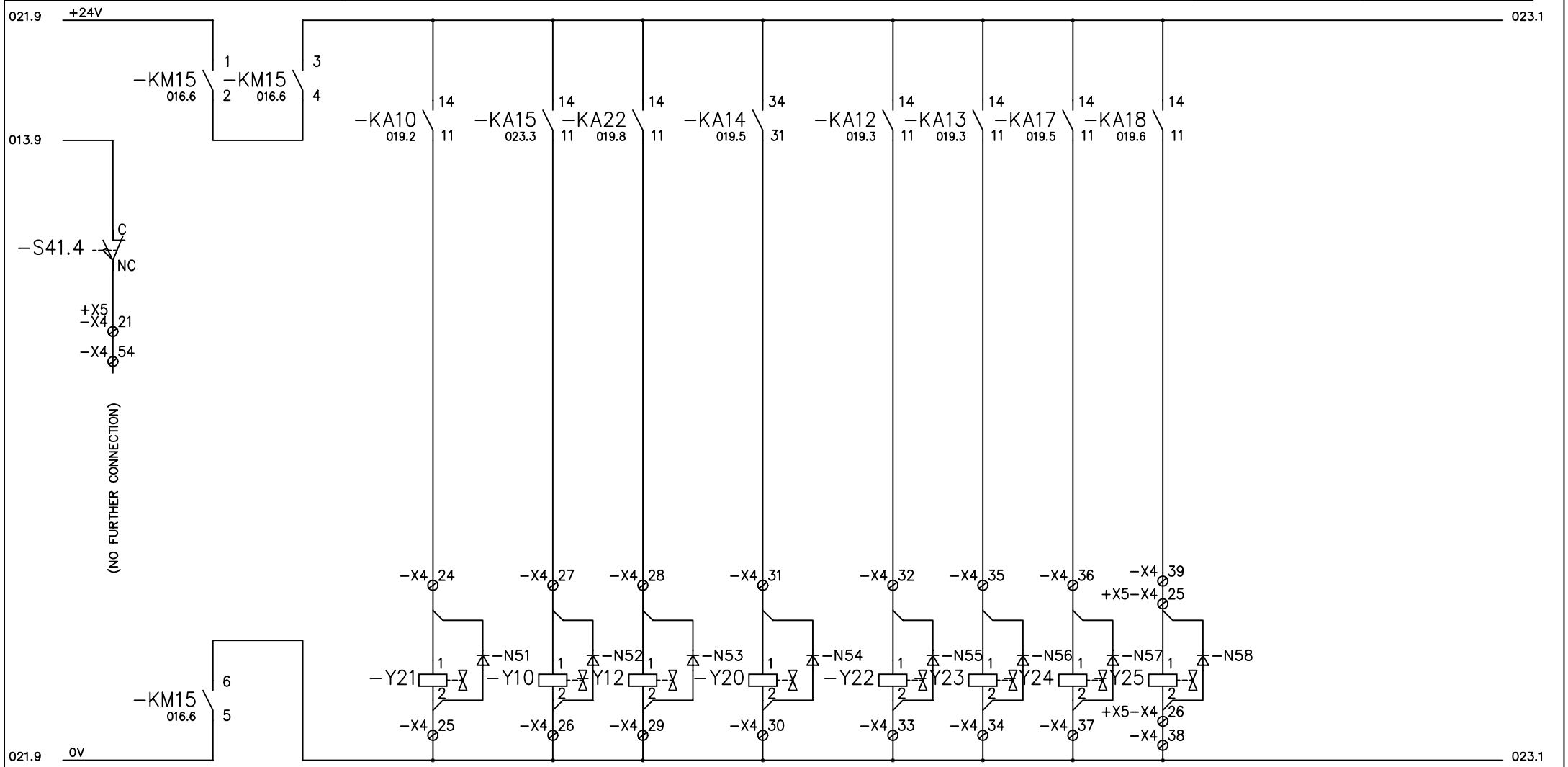

				Date	30.01.01	MJELLEM & KARLSEN VERFT A/S M/V "SEIS RANGER"	TTS - Norlift AS MARINE CARGO GEAR	ELECTRO HYDRAULIC OFFSHORE CRANE GPCFO 2000-5020 CRANE NO.2078 CONTROL CIRCUIT DIAGRAM	Project no. 2078
				Drawn by:	JSB				= +V2
A		12.06.01	JSB	Approved					Scale %
Rev.	Alteration	Date	Sign.	Norm		Master drwg.	Replaces	Replased by	Drwg no. A3-10101
									Sheet 22
									N.sh. 23

1	2	3	4	5		6		7	8	9 3-1010123
		M-WINCH		M-WINCH STOP		SPEED RED.				
		JOYSTICK		UP	DOWN	UP	DOWN			

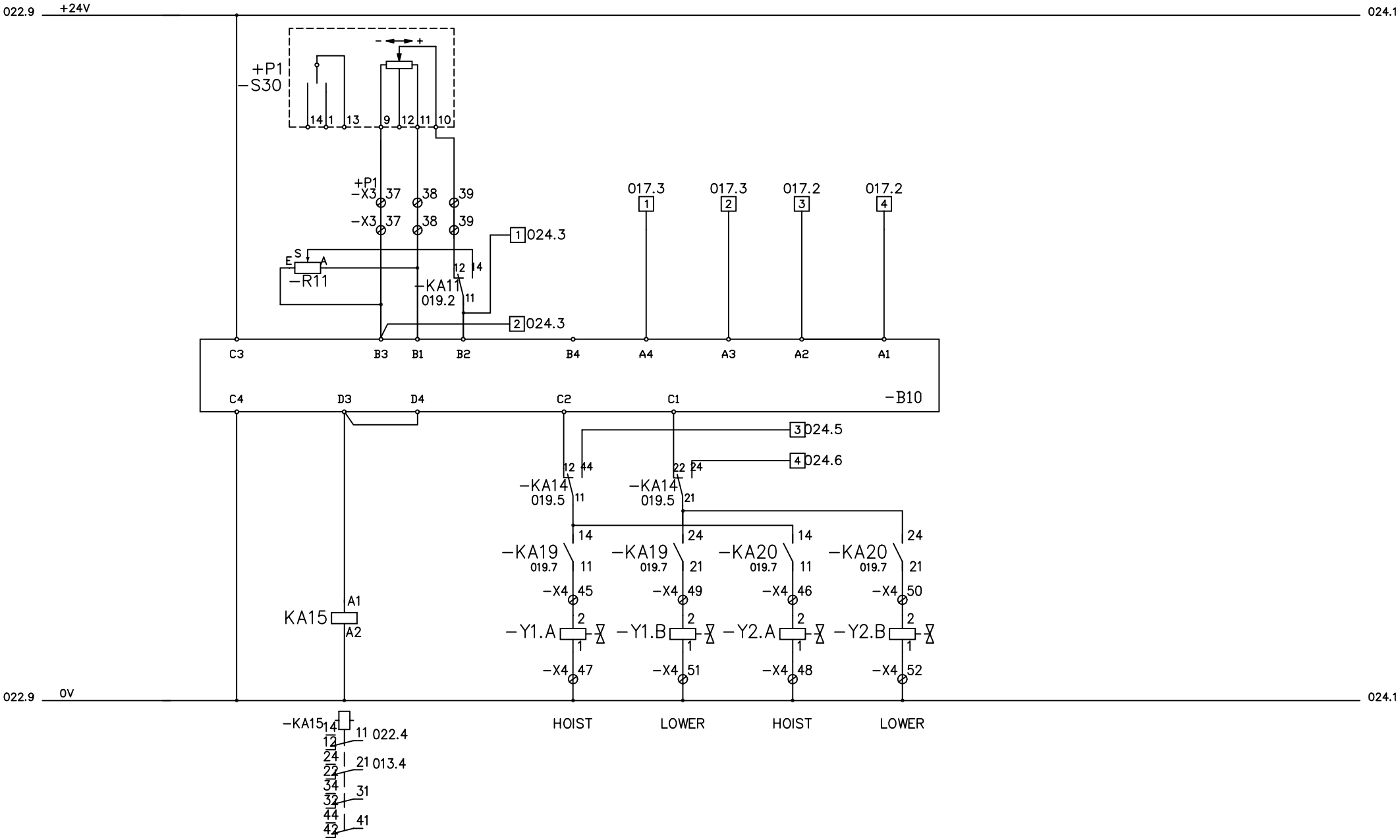

				Date	31.01.01	MJELLEM & KARLSEN VERFT A/S M/V "SEIS RANGER"		TTS - Norlift AS MARINE CARGO GEAR	ELECTRO HYDRAULIC OFFSHORE CRANE GPCFO 2000-5020 CRANE NO.2078 CONTROL CIRCUIT DIAGRAM	Project no. 2078		=
				Drawn by	JSB							+V2
				Approved						Scale %	Drwg no. A3-10101	Sheet 23
Rev.	Alteration	Date	Sign.	Norm		Master drwg.	Replaces	Replased by				N.sh. 24

1	2	3	4	5	6		7		8	9 3-1010124
	WINCH	REF.			A-WINCH STOP		SPEED REDUCTION			
	BRAKE	SIGNAL			UP	DOWN	UP	DOWN		

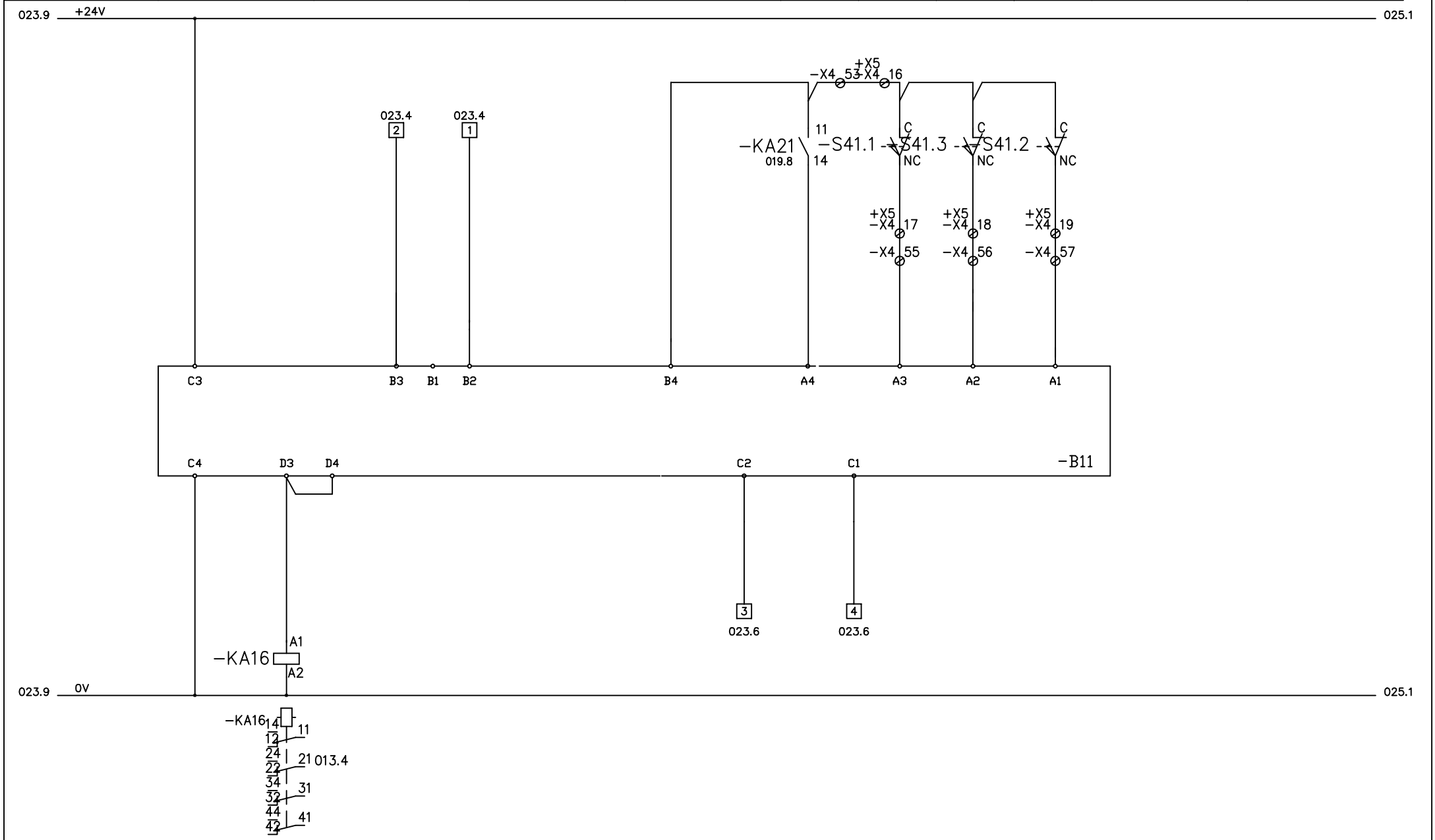

				Date	31.01.01	MJELLEM & KARLSEN VERFT A/S M/V "SEIS RANGER"		TTS - Norlift AS MARINE CARGO GEAR	ELECTRO HYDRAULIC OFFSHORE CRANE GPCFO 2000-5020 CRANE NO.2078 CONTROL CIRCUIT DIAGRAM	Project no. 2078		=
				Drawn by	JSB							+V2
A	12.06.01	JSB		Approved						Scale %	Drwg no. A3-10101	Sheet 24
Rev.	Alteration	Date	Sign.	Norm		Master drwg.	Replaces	Replased by				N.sh. 25

1	2	3	4	5	6		7		8	9 3-1010125
			FOLDING JIB		STOP FOLD JIB		SPEED RED.			
			JOYSTICK		IN	OUT	IN	OUT		

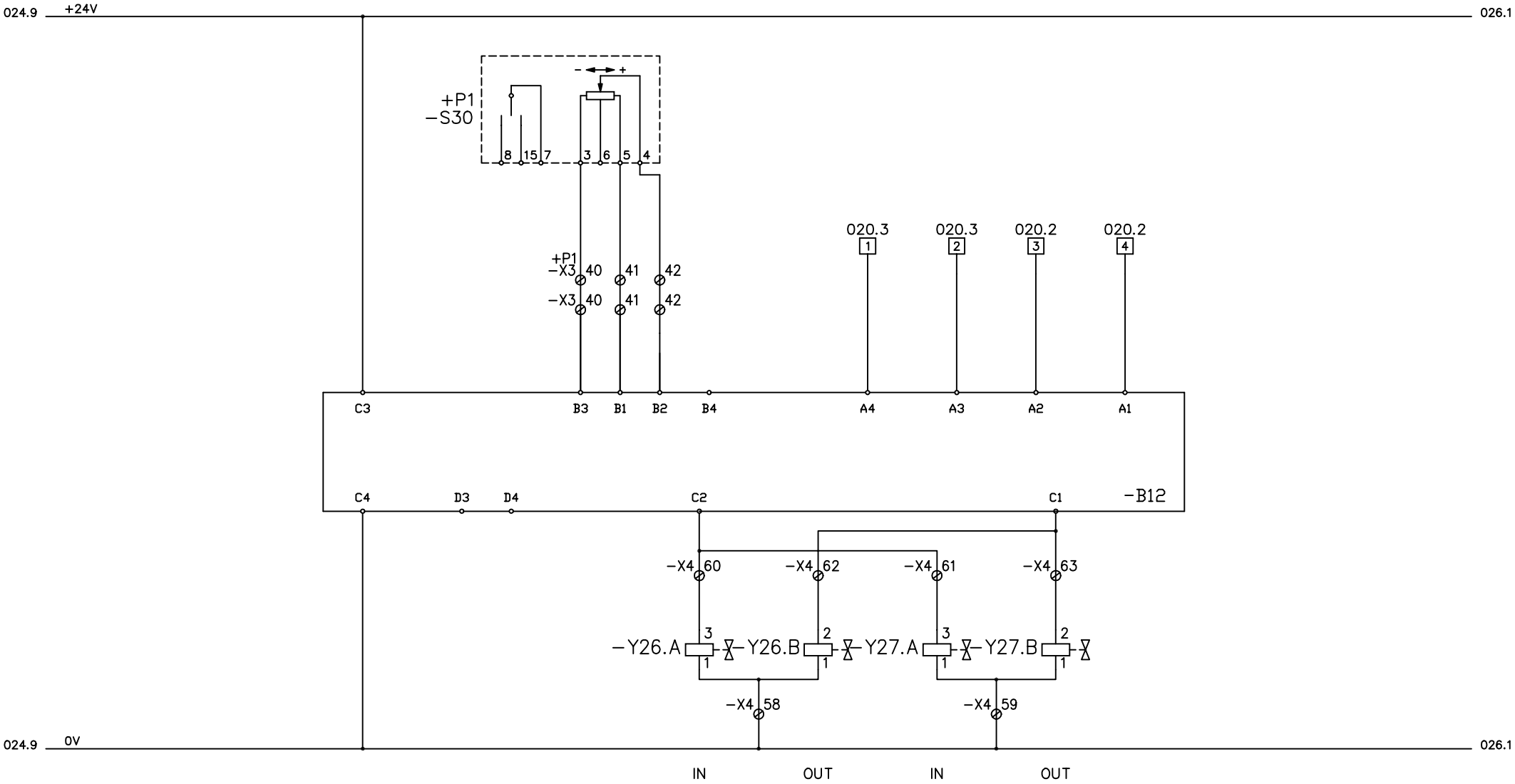

				Date	31.01.01	MJELLEM & KARLSEN VERFT A/S M/V "SEIS RANGER"		TTS - Norlift AS MARINE CARGO GEAR	ELECTRO HYDRAULIC OFFSHORE CRANE GPCFO 2000-5020 CRANE NO.2078 CONTROL CIRCUIT DIAGRAM	Project no. 2078		=
				Drawn by	JSB							+V2
				Approved						Scale %	Drwg no. A3-10101	Sheet 25
Rev.	Alteration	Date	Sign.	Norm		Master drwg.	Replaces	Replased by				N.sh. 26

1	2	3	4	5	6		7		8	9 3-1010126
			LUFFING		STOP LUFFING		SPEED REDUCTION			
			JOYSTICK		IN	OUT	IN	OUT		

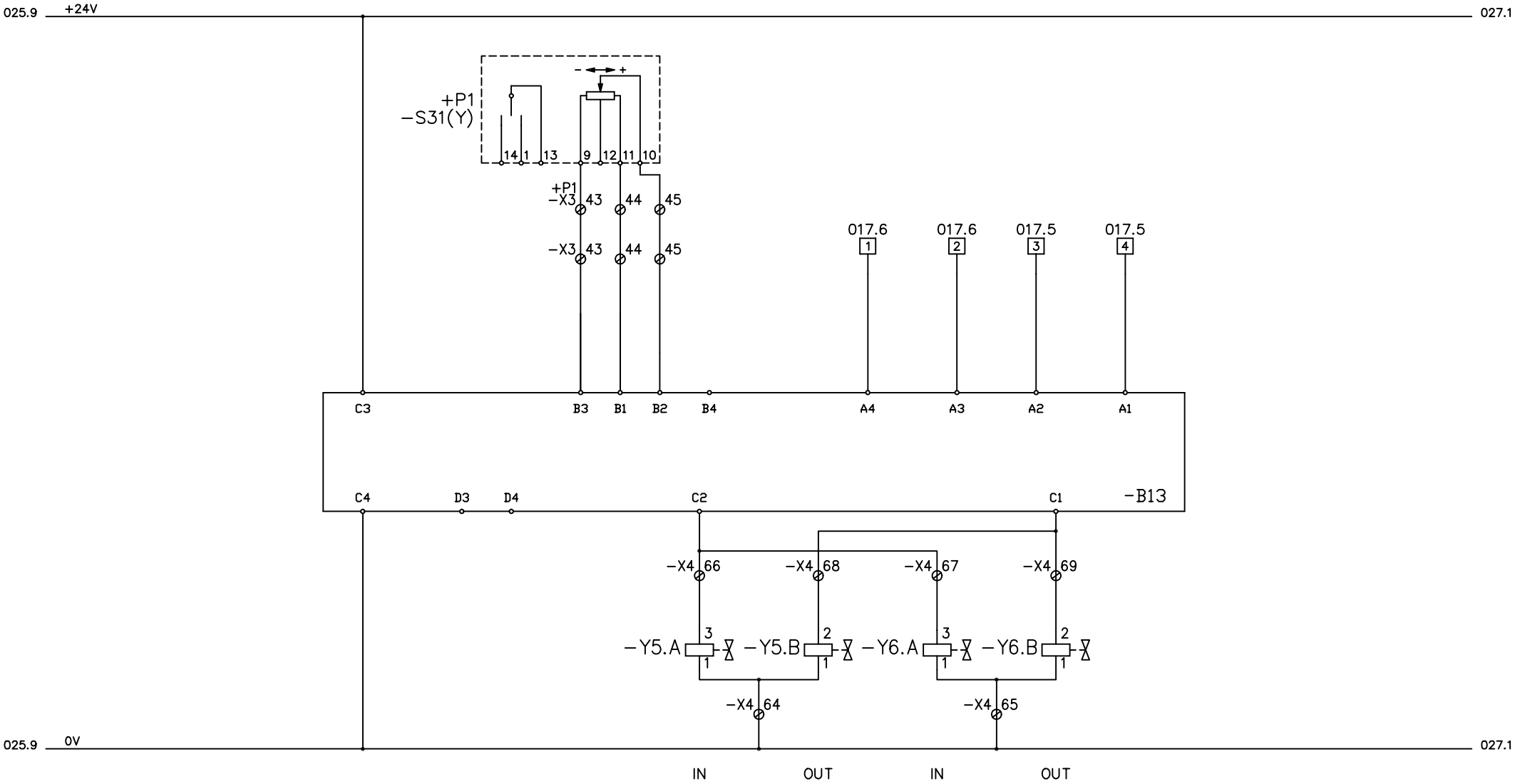

				Date	31.01.014	MJELLEM & KARLSEN VERFT A/S M/V "SEIS RANGER"		TTS - Norlift AS MARINE CARGO GEAR	ELECTRO HYDRAULIC OFFSHORE CRANE GPCFO 2000-5020 CRANE NO.2078 CONTROL CIRCUIT DIAGRAM	Project no. 2078		=
				Drawn by:	JSB							+V2
				Approved						Scale %	Drwg no. A3-10101	Sheet 26
Rev.	Alteration	Date	Sign.	Norm		Master drwg.	Replaces	Replased by				N.sh. 27

1	2	3	4	5	6		7		8	9
		SLEWING	SLEWING		SLEWING STOP		SPEED REDUCTION			
		BRAKE	JOYSTICK		LEFT	RIGHT	LEFT	RIGHT		

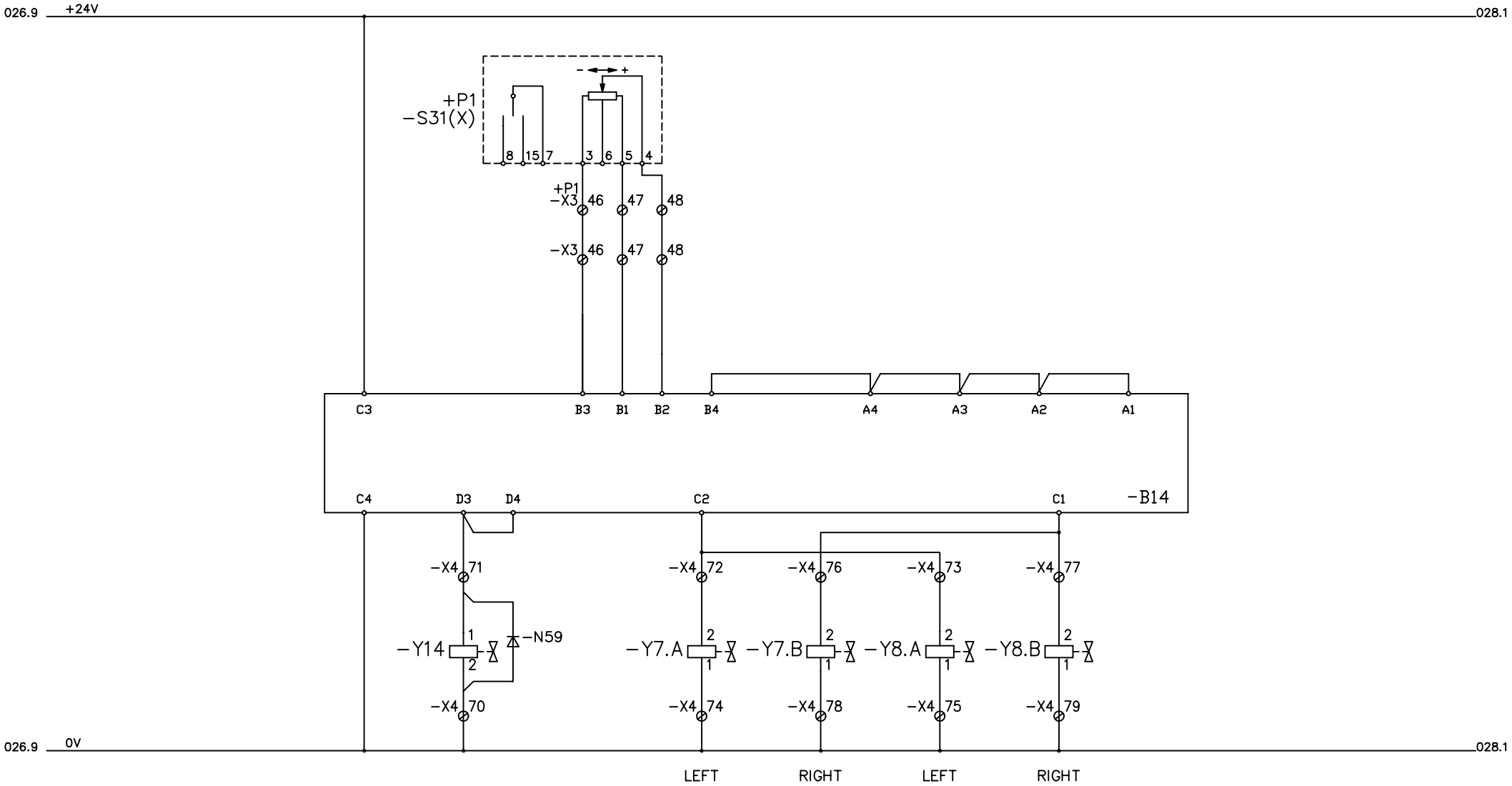

				Date	31.01.01	MJELLEM & KARLSEN VERFT A/S M/V "SEIS RANGER"	TTS - Norlift AS MARINE CARGO GEAR	ELECTRO HYDRAULIC OFFSHORE CRANE GPCFO 2000-5020 CRANE NO.2078 CONTROL CIRCUIT DIAGRAM	Project no. 2078		=	
				Drawn by:	JSB						+V1	
				Approved					Scale %	Drwg no. A3-10101		Sheet 27
Rev.	Alteration	Date	Sign.	Norm		Master drwg.	Replaces	Replased by				N.sh. 28

1	2	3	4	5	6	7	8	9 3-1010128
		TENSION	TENSION					
		POT.METER	PROP.					

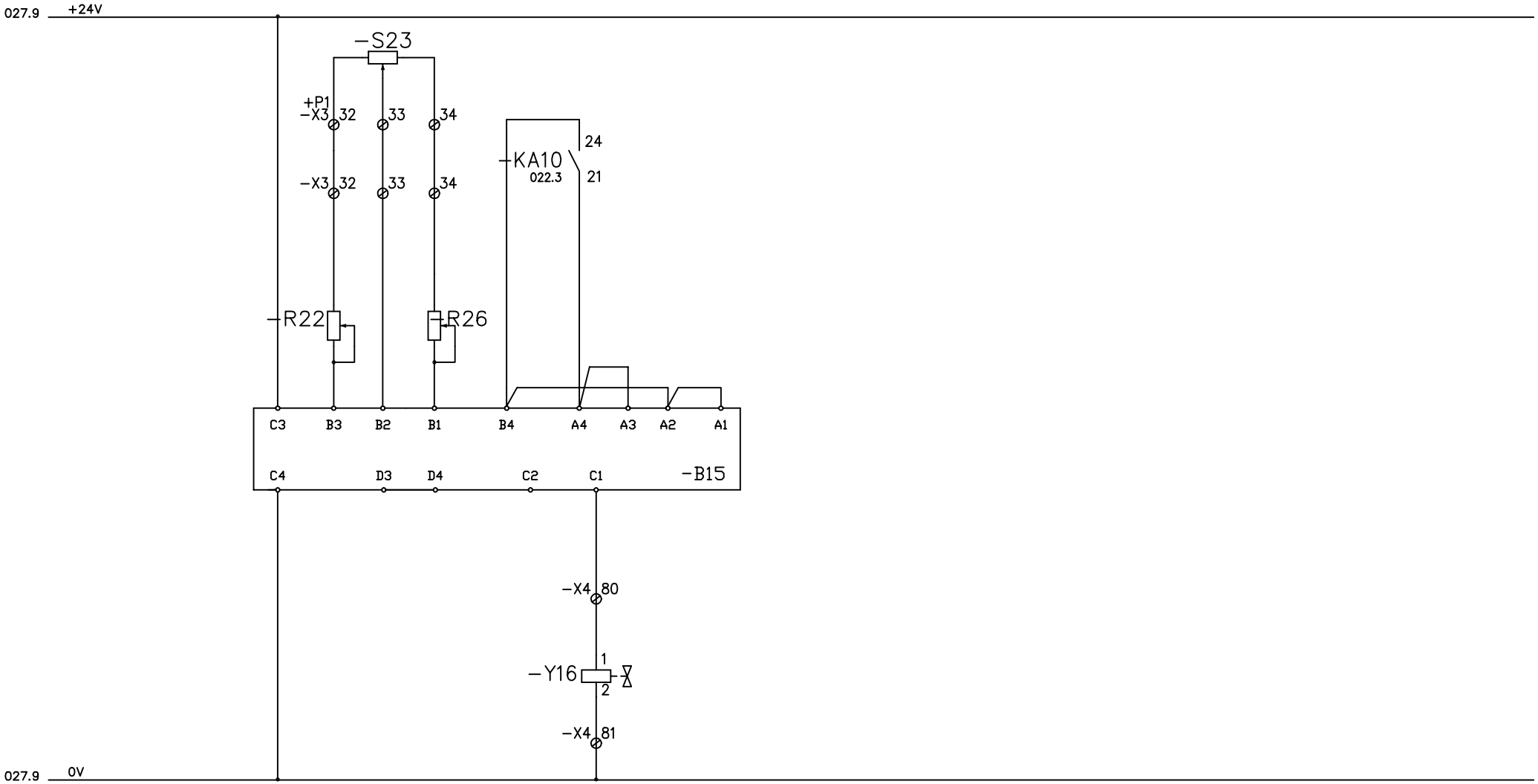

				Date	31.01.01	MJELLEM & KARLSEN VERFT A/S M/V "SEIS RANGER"		TTS - Norlift AS MARINE CARGO GEAR	ELECTRO HYDRAULIC OFFSHORE CRANE GPCFO 2000-5020 CRANE NO.2078 CONTROL CIRCUIT DIAGRAM	Project no. 2078		=
				Drawn by:	JSB							+V2
				Approved						Scale %	Drwg no. A3-10101	Sheet 28
Rev.	Alteration	Date	Sign.	Norm		Master drwg.	Replaces	Replased by				N.sh. —

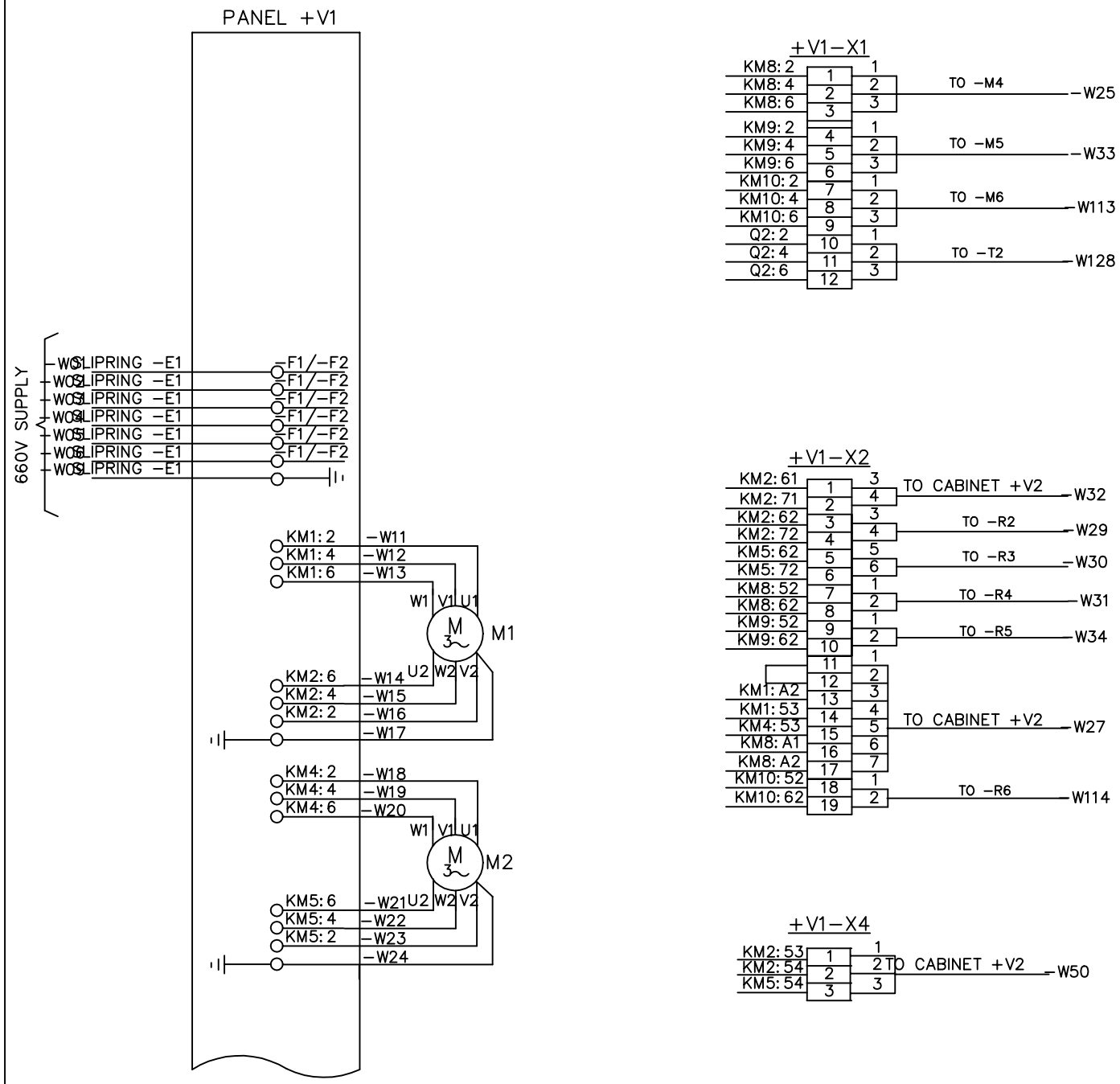

				Date	31.01.01	MJELLEM & KARLSEN VERFT A/S M/V "SEIS RANGER"		TTS - Norlift AS MARINE CARGO GEAR	ELECTRO HYDRAULIC OFFSHORE CRANE GPCFO 2000-5020 CRANE NO.2078 TERMINAL LIST DIAGRAM +V1	Project no. 2078		=
				Drawn by:	JSB							+V1
				Approved						Scale %	Drwg no. A3-10102	Sheet 01
Rev.	Alteration	Date	Sign.	Norm		Master drwg.	Replaces	Replased by				N.sh. 02

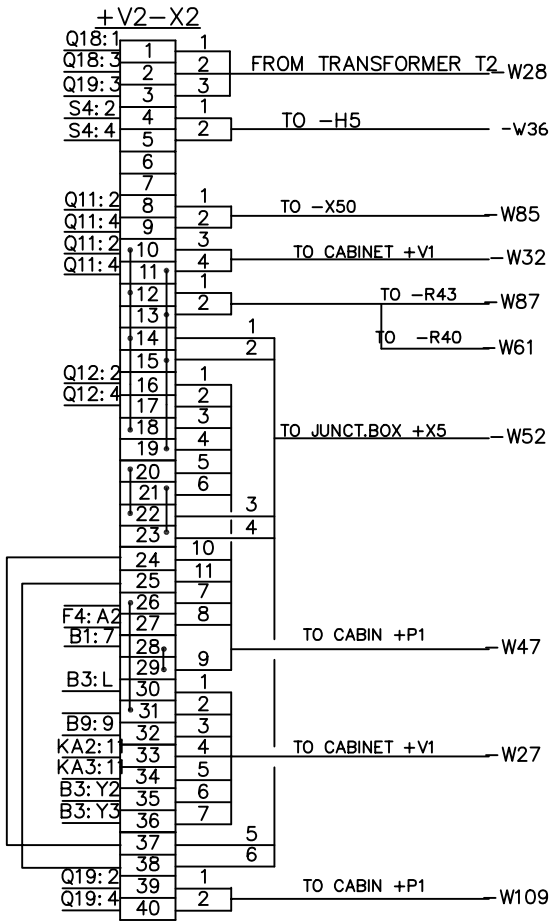

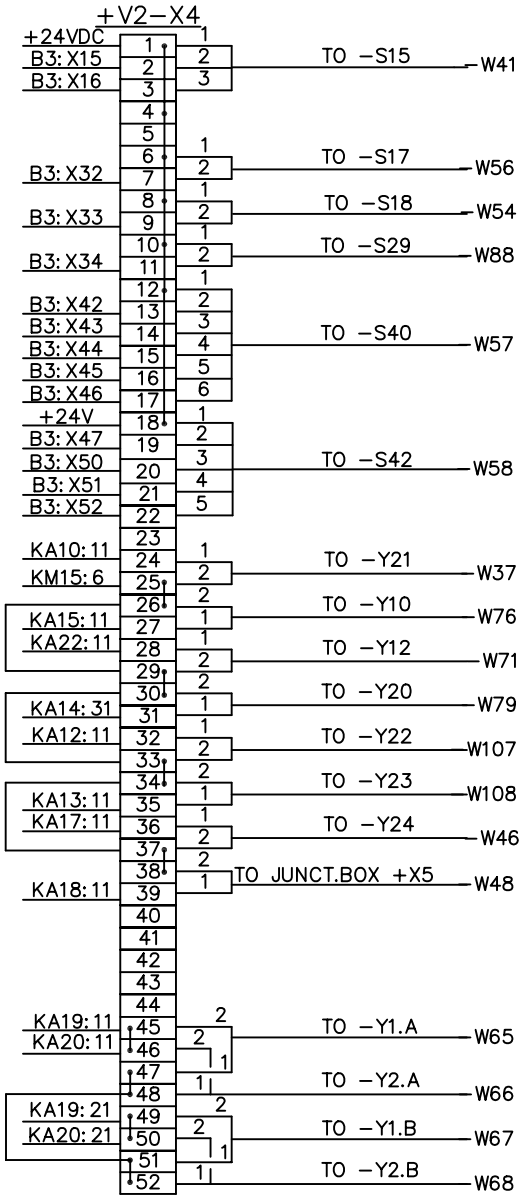

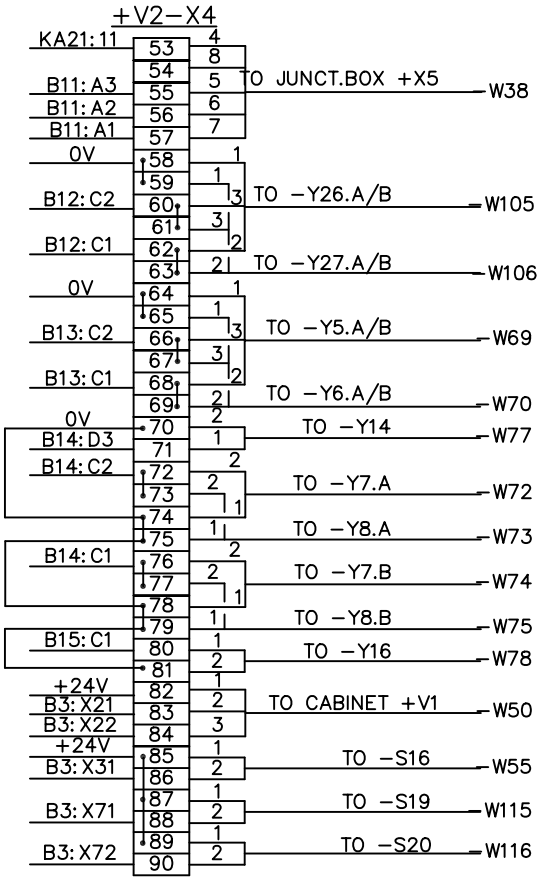

				Date	31.01.01	MJELLEM & KARLSEN VERFT A/S M/V "SEIS RANGER"		TTS - Norlift AS MARINE CARGO GEAR	ELECTRO HYDRAULIC OFFSHORE CRANE GPCFO 2000-5020 CRANE NO.2078 TERMINAL LIST DIAGRAM	Project no. 2078		=
				Drawn by	JSB							+V2
A		12.06.01	JSB	Approved						Scale %	Drwg no. A3-10102	Sheet 02
Rev.	Alteration	Date	Sign.	Norm		Master drwg.	Replaces	Replased by				N.sh. 03

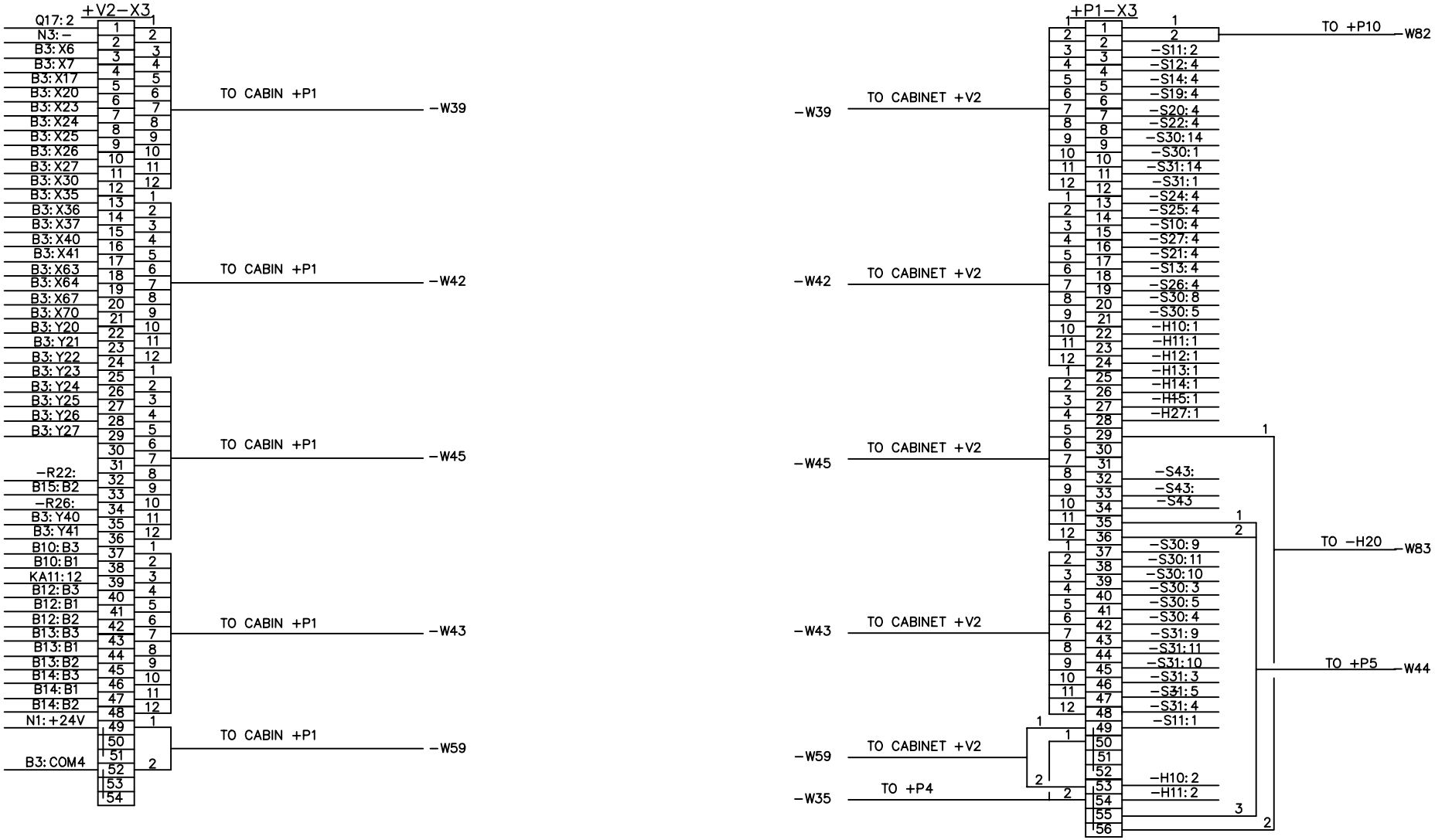

				Date	31.01.01	MJELLEM & KARLSEN VERFT A/S M/V "SEIS RANGER"		TTS - Norlift AS MARINE CARGO GEAR	ELECTRO HYDRAULIC OFFSHORE CRANE GPCFO 2000-5020 CRANE NO.2078 TERMINAL LIST DIAGRAM	Project no. 2078		=	
				Drawn by	JSB							+V2	
				Approved						Scale %	Drwg no. A3-10102		Sheet 03
Rev.	Alteration	Date	Sign.	Norm		Master drwg.	Replaces	Replased by					N.sh. 04

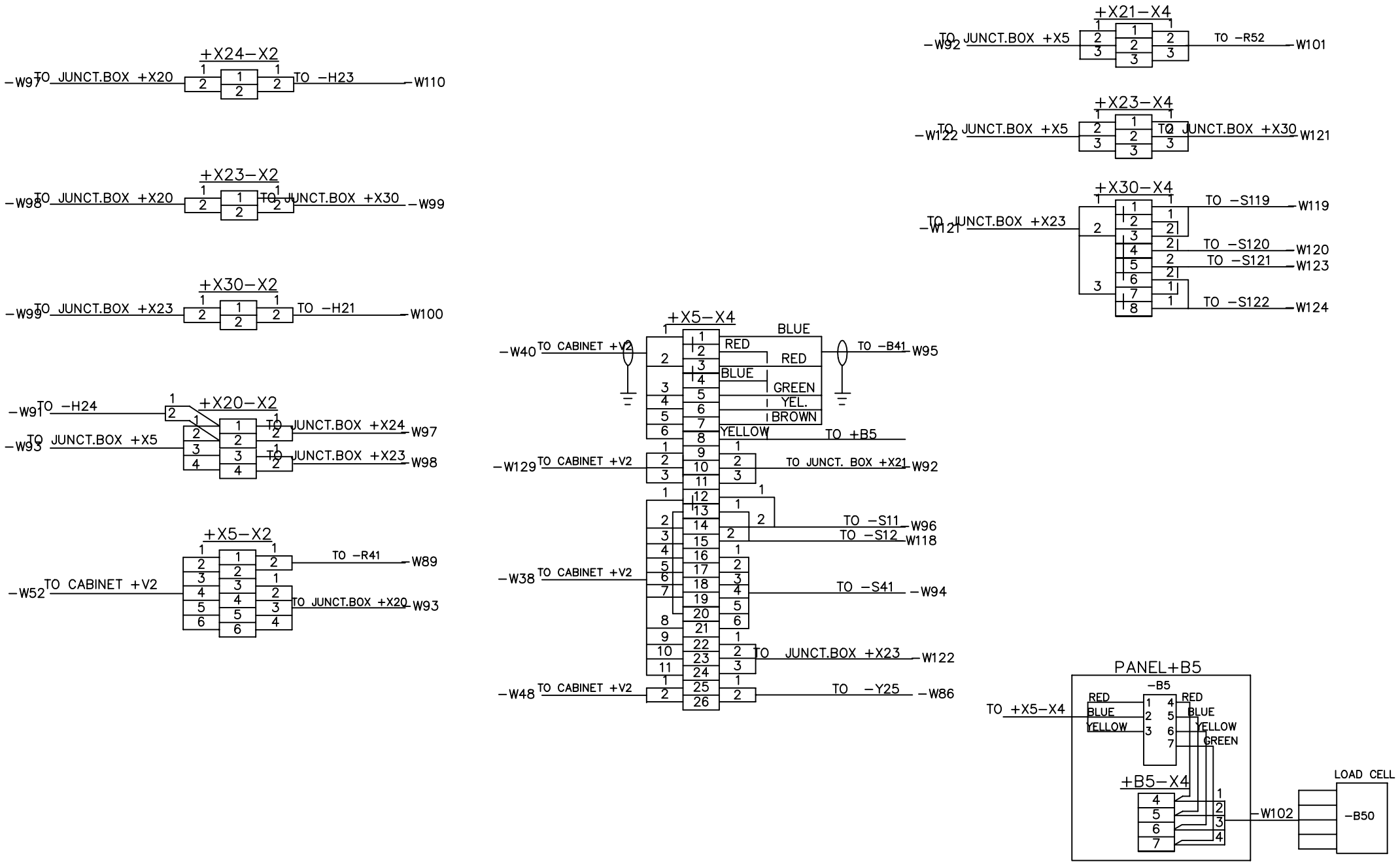

				Date	01.02.01	MJELLEM & KARLSEN VERFT A/S M/V "SEIS RANGER"		TTS - Norlift AS MARINE CARGO GEAR	ELECTRO HYDRAULIC GPCFO 2000-5020 CRANE NO.1899 TERMINAL LIST DIAGRAM JUNCTION	Project no. 2078	=
				Drawn by	JSB						%
				Approved						Scale BOXES %	Drwg no. A3-10102 / Sheet 04
Rev.	Alteration	Date	Sign.	Norm		Master drwg.	Replaces	Replased by			N.sh. 05

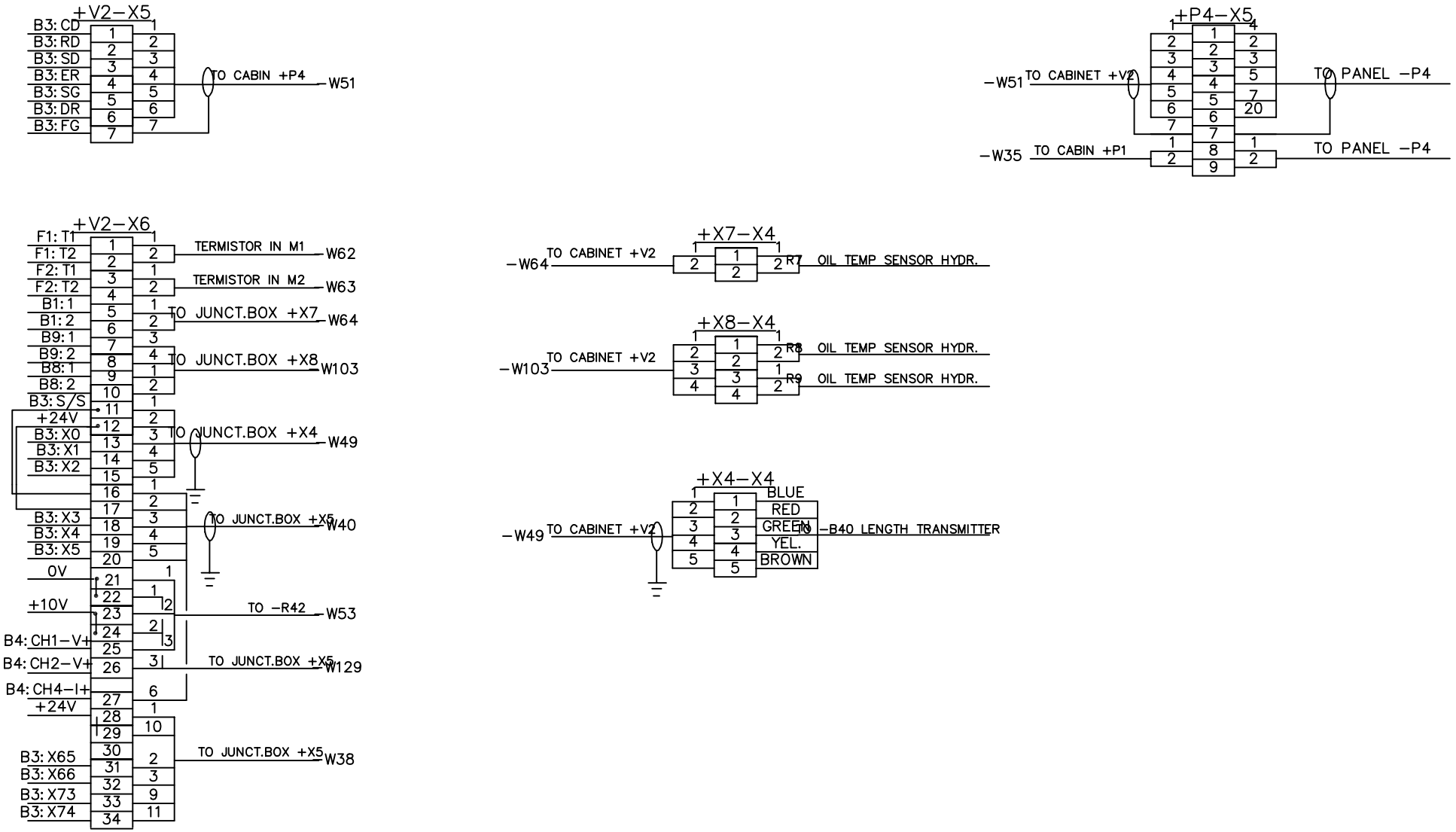

				Date	01.02.01	MJELLEM & KARLSEN VERFT A/S M/V "SEIS RANGER"		TTS - Norlift AS MARINE CARGO GEAR	ELECTRO HYDRAULIC OFFSHORE CRANE GPCFO 2000-5020 CRANE NO.2078 TERMINAL LIST DIAGRAM	Project no. 2078		=
				Drawn by:	JSB							+V2
				Approved						Scale %	Drwg no. A3-10102	Sheet 05
Rev.	Alteration	Date	Sign.	Norm		Master drwg.	Replaces	Replased by				N.sh. 06

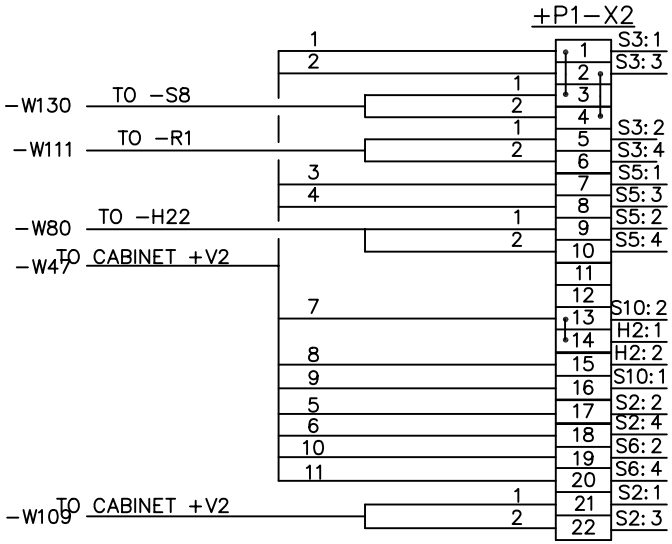

				Date	31.01.01	MJELLEM & KARLSEN VERFT A/S M/V "SEIS RANGER"		TTS - Norlift AS MARINE CARGO GEAR	ELECTRO HYDRAULIC offshore crane GPCFO 2000-5020 CRANE NO.2078 TERMINAL LIST DIAGRAM	Project no. 2078		=
				Drawn by:	jsb							+P1
				Approved						Scale %	Drwg no. A3-10102	Sheet 06
Rev.	Alteration	Date	Sign.	Norm		Master drwg.	Replaces	Replased by				N.sh. —

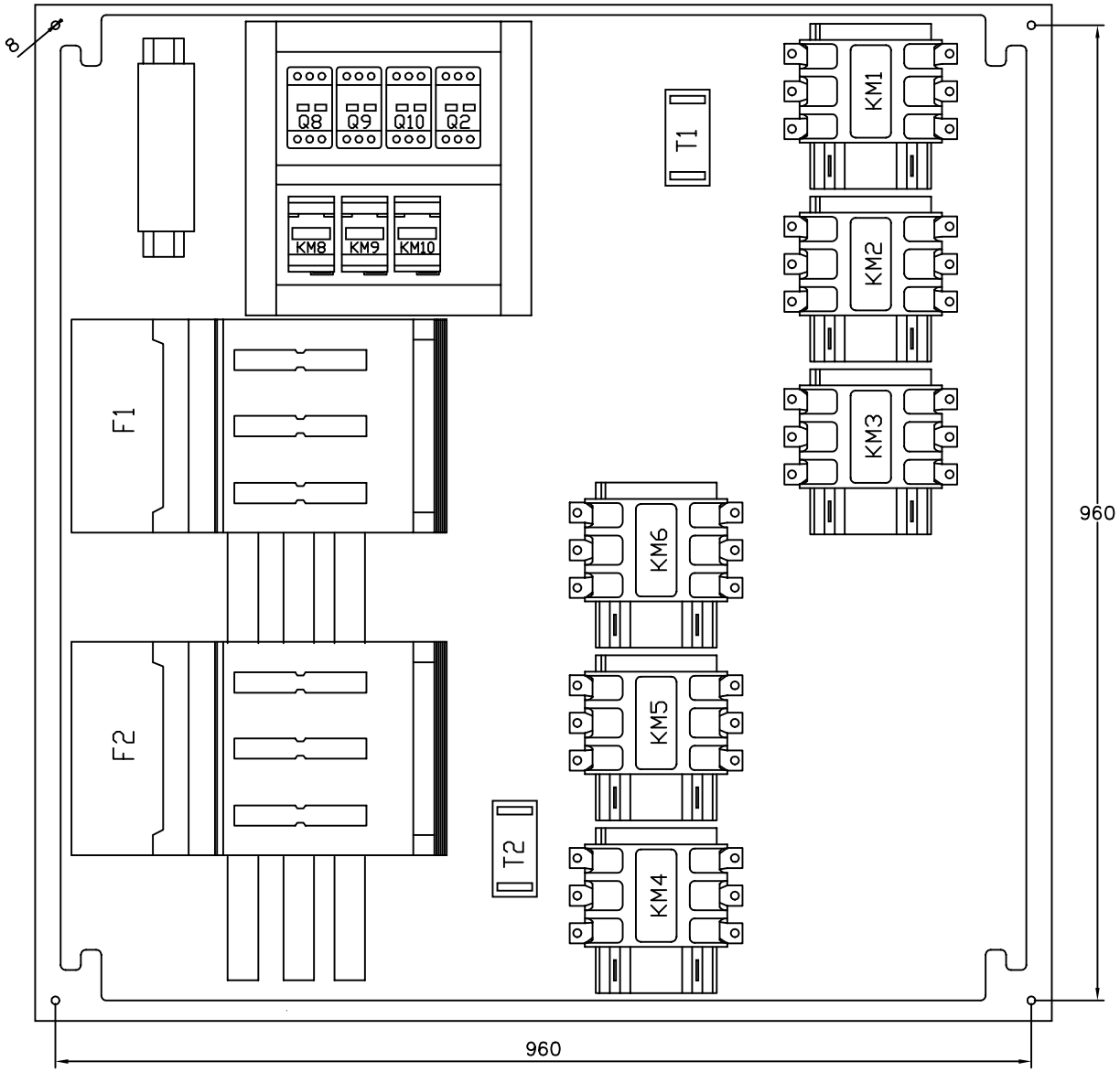

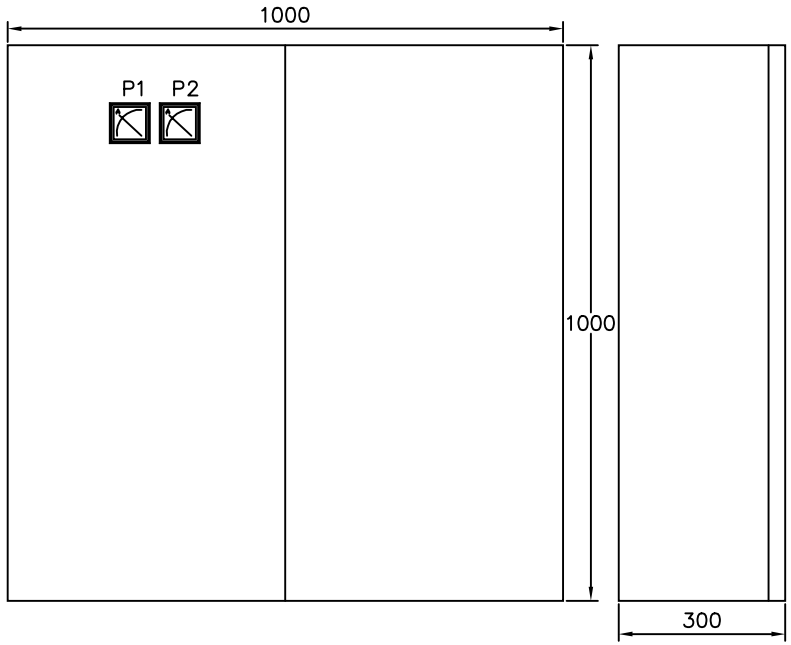

20x40 mm

				Date	31.01.01	MJELLEM & KARLSEN VERFT A/S M/V "SEIS RANGER"		TTS - Norlift AS MARINE CARGO GEAR	ELECTRO HYDRAULIC OFFSHORE CRANE GPCFO 2000-5020 CRANE NO.2078 LAYOUT, CABINET +V1	Project no. 2078		=
				Drawn by:	JSB							+V1
				Approved						Scale %	Drwg no. A3-10103	Sheet 01
Rev.	Alteration	Date	Sign.	Norm		Master drwg.	Replaces	Replased by				N.sh. 02

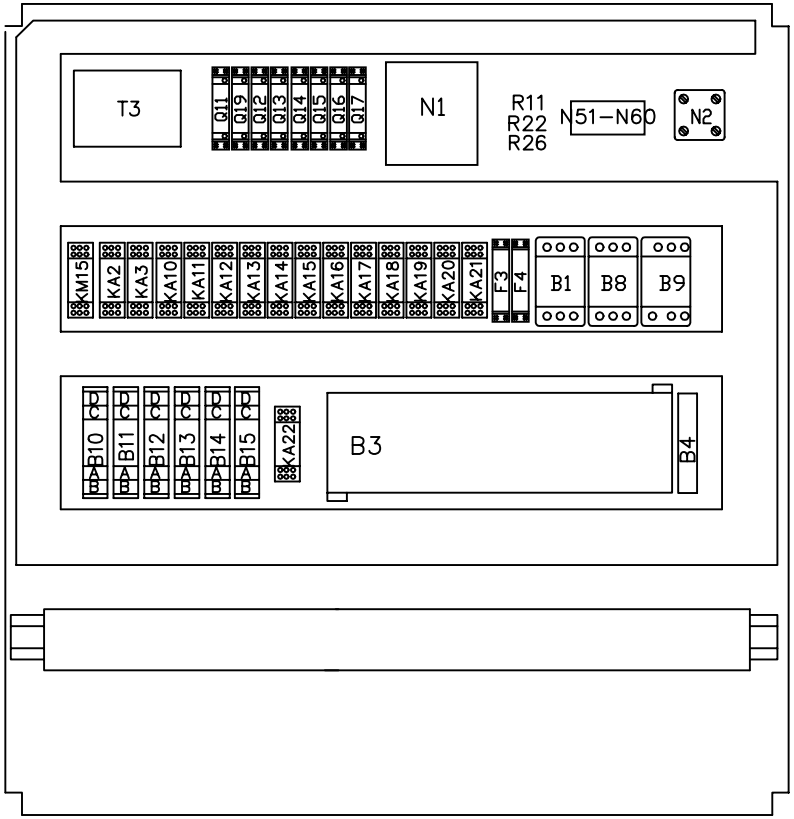

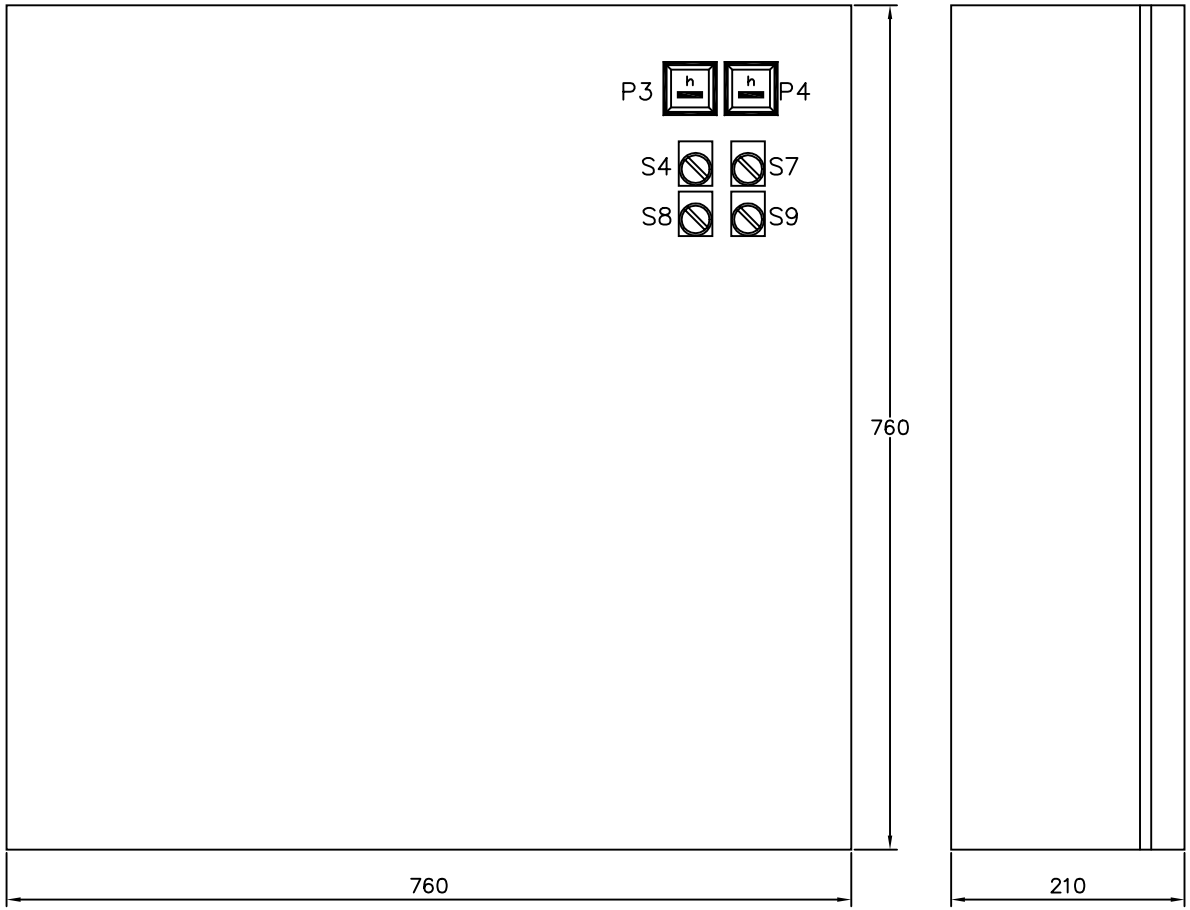

CONTROL POWER	LIGHT	MOTOR	COOLER FAN
OFF ON	OFF ON	1 1+2 2	AUTO RUN

20x40 mm

20x40 mm

				Date	31.01.01	MJELLEM & KARLSEN VERFT A/S M/V "SEIS RANGER"	TTS - Norlift AS MARINE CARGO GEAR	ELECTRO HYDRAULIC OFFSHORE CRANE GPCFO 2000-5020 CRANE NO.2078 LAYOUT, CABINET +V2
				Drawn by:	JSB			
				Approved				
Rev.	Alteration	Date	Sign.	Norm		Master drwg.	Replaces	Replased by

Project no.	=
2078	+V1
Scale	Drwg no.	Sheet 02
%	A3-10103	N.sh. 03

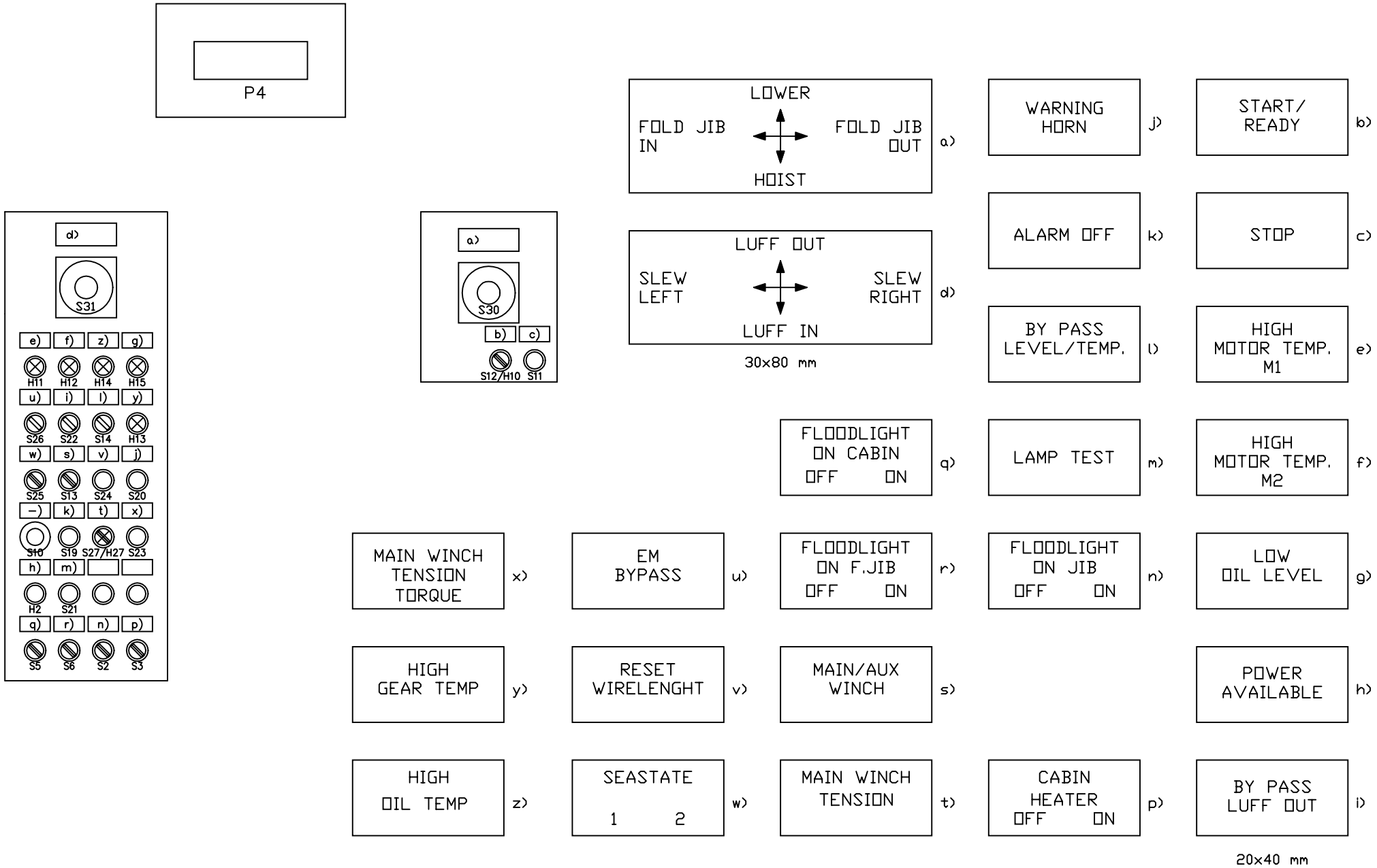

				Date	23.02.01	MJELLEM & KARLSEN VERFT AS M/V "SEIS RANGER"		TTS - Norlift AS MARINE CARGO GEAR	ELECTRO HYDRAULIC OFFSHORE CRANE OFFSHORE GPCFO 2000-5020 CRANE NO.2078 CONTROL CIRCUIT DIAGRAM	Project no. 2078		=
				Drawn by:	JSB							+P1
				Approved						Scale %	Drwg no. A3-10103	Sheet 03
Rev.	Alteration	Date	Sign.	Norm		Master drwg.	Replaces	Replased by				N.sh. 04

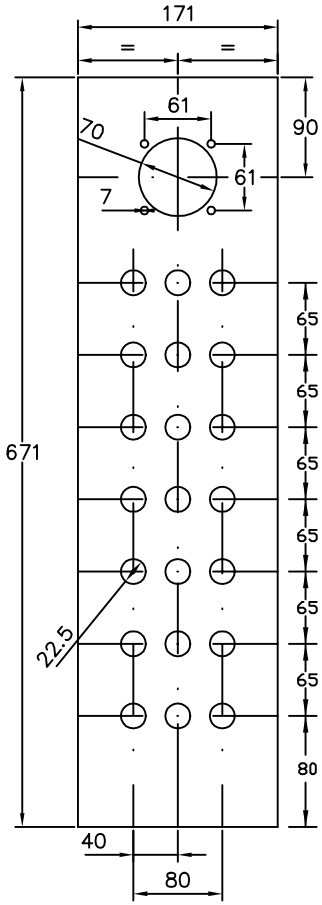

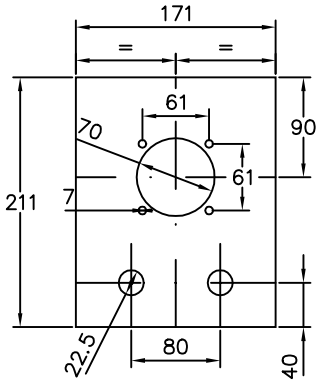

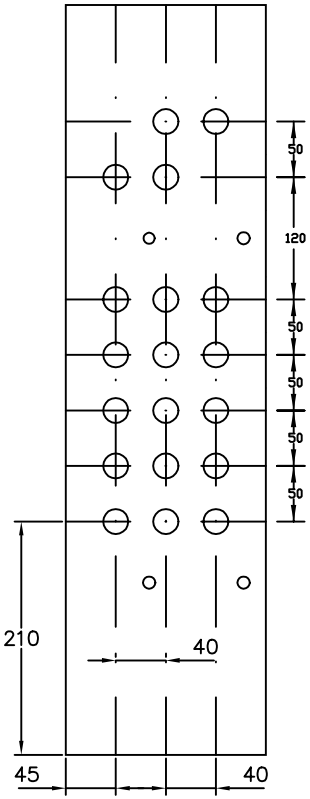

Hull i bunn av boks:
11 stk. 21mm
4 stk. 23mm
4 stk. 29mm

				Date	31.01.01	MJELLEM & KARLSEN A/S M/V "SEIS RANGER"		TTS - Norlift AS MARINE CARGO GEAR	ELECTRO HYDRAULIC OFFSHORE CRANE GPCFO 2000-5020 CRANE NO.2078 CONTROL CIRCUIT DIAGRAM	Project no. 2078		=
				Drawn by:	JSB							+V1
				Approved						Scale %	Drwg no. A3-10103	Sheet 04
Rev.	Alteration	Date	Sign.	Norm		Master drwg.	Replaces	Replased by				N.sh. —

	BL□CK DIAGRAM	A3-10100 sh. 1		
	CABLE LIST	A3-10100 sh. 2 & 3		
	CIRCUIT DIAGRAM	A3-10101 sh.1-28		
	TERMINAL DIAGRAM	A3-10102 sh.1-5		
1	EQUIP IN BASE/SLEW	A4-9314		
1	EQUIP □N CRANE/JIB	A4-9315		
1	EQUIP IN/□N CABIN	A4-9316		
	CABLE	RP 2x1,5+E		
	CABLE	RP 3x1.5+E		
	CABLE	RP 4x1,5		
	CABLE	RP 7x1,5		
	CABLE	RP 12x1,5		
	CABLE	RP 3x4+E		
	CABLE	RCXP 1x95		
	CABLE	RCXP 1x70		
	CABLE	RC□P 4x1,5/7		
	CABLE	RC□P 4X2X0,5		
	CABLE	PURFLEX 7G1,5		
	CABLE	PURFLEX 12G1,5		
	CABLE	ØLFLEX 3x1,5+E		
	CABLE	NMHV□ 2x1,5+E		
N□S	ITEM	TYPE/DRWG	P□S	MANUFAC.

DRAWN BY 13.02.01 JSB	CHECKED BY	APPR BY
PR□JECT MJELLEM & KARLSEN VERFT A/S	TS - Norlift AS MARINE CARG□ GEAR	
DRWG NAME ELECTRICAL EQUIPMENT Crane no. 2078	SCALE	Sh. 1 of 1 sh.
	DRWG N□ A4-9313	REV
MASTER DRWG	REPLACED BY	REPLACES

	IN BASE			
1	SLIP-RING		-E1	
	IN CRANE			
2	MOTOR		-M1,-M2	
1	STARTER CABINET	A4-9317	+V1	
1	CONTROL CABINET	A4-9318	+V2	
2	PRESSOSTATE HP		-S18,S29	
3	PRESSOSTATE LP		S16,S19,S20	
1	LIGHT ARMATURE		-H5	
2	FLUORESCENT TUBE		-H5	
1	LEVEL SWITCH		-S15	
3	TEMP. SENSORS		-R7,-R8,-R9	
3	JUNCTION BOX		+X7,+X8,+X9	
1	TRANSFORMER		-T2	
1	RECEPTACLE		-X50	
1	LIGHT ARMATURE		-H6	
2	FLUORESCENT TUBE		-H6	
NOS	ITEM	TYPE/DRWG	POS	MANUFAC.

DRAWN BY 19.02.01 JSB	CHECKED BY	APPR BY
PROJECT MJELLEM & KARLSEN VERFT A/S	TS - Norlift AS MARINE CARGO GEAR	
DRWG NAME EL. EQUIPM. IN BASE/CRANE Crane no. 2078	SCALE	Sh. 1 of 1 sh.
	DRWG NO A4-9314	REV
MASTER DRWG	REPLACED BY	REPLACES

	ON CRANE			
1	FAN MOTOR		-M6	
1	FAN MOTOR		-M4	
1	FAN MOTOR		-M5	
1	LUFFING LIM. SW.		-S42	
	W/POTMETER		-R42	
1	HOIST LIM. SWITCH		-S40	
1	W/ENCODER		-B40	
1	LP PRESSOSTATE		-S17	
	ON JIB			
1	JUNCTION BOX		+X5	
30	TERMINALS		-X4,+B5-X4	
1	PRE-AMPLIFIER		-B5	
1	JUNCTION BOX		+X23	
4	TERMINALS		-X4	
1	LP PRESSOSTATE		-S11	
1	LOAD BOLT		-B50	
2	JUNCTION BOX		+X24,+X25	
2	JUNCTION BOX		+X20,+X21	
2	FLOODLIGHT		-H23,-H24	
	ON FOLDING JIB			
2	END LIM.SWITCH		-S119,-S120	
1	POTMETER		-R52	
1	FLOODLIGHT		-H21	
1	A-HOIST LIM.SWITCH		-S41	
1	W/ENCODER		-B41	
1	JUNCTION BOX		+X30	
4	TERMINALS		-X4	
NOS	ITEM	TYPE/DRWG	POS	MANUFAC.

DRAWN BY 19.02.01 JSB	CHECKED BY	APPR BY
PROJECT MJELLEM&KARLSEN VERFT A/S	TTS - Norlift AS MARINE CARGO GEAR	
DRWG NAME EL EQUIPM. ON CRANE/JIB Crane no. 2078	SCALE	Sh. 1 of 1 sh.
	DRWG NO A4-9315	REV
MASTER DRWG	REPLACED BY	REPLACES

	ON CABIN			
1	ALARM HORN		-H20	
1	FLOODLIGHT		H22	
	IN CABIN			
1	OPERATORS PANEL	A4-9320	+P1	
1	OPERATORS PANEL		+P4	
1	LIGHT ARMATURE		-H4	
1	FLUORESCENT TUBE		-H4	
1	HEATER		-R1	
1	OUTLET		+X3	
1	WIPER MOTOR		-M9	
1	WIPER ARM		-M9	
1	WIPER		-M9	
1	WIPER MOTOR		-M10	
1	WIPER ARM		-M10	
1	WIPER		-M10	
1	SIGN. PANEL	A4-9321	+P5	
9	TERMINAL		+P4-X5	
1	DISPLAY		+P4	
2	JOYSTICK		-S30,-S31	
1	POTMETER NOB		-S23	
1	POTMETER		-S23	
NOS	ITEM	TYPE/DRWG	POS	MANUFAC.

DRAWN BY 19.02.01 JSB	CHECKED BY	APPR BY
PROJECT MJELLEM & KARLSEN VERFT AS	TTS - Norlift AS MARINE CARGO GEAR	
DRWG NAME EL EQUIPM. ON/IN CABIN Crane no. 2078	SCALE	Sh. 1 of 1 sh.
	DRWG NO A4-9316	REV
MASTER DRWG	REPLACED BY	REPLACES

NOS	ITEM	TYPE/DRWG	POS	MANUFAC.
1	CABINET		+V1	
4	BRACKET F. CU-BAR		-F1,-F2	
3	CU-BAR		-F1,-F2	
3	COWER FOR BAR		-F1,-F2	
2	ADAPTER		-F1,-F2	
2	FUSE DISC.SWITCH		-F1,-F2	
6	NH2-FUSE		-F1,-F2	
2	CONTACTOR		-KM1,-KM2	
2	CONTACTOR		-KM4,-KM5	
2	CONTACTOR		-KM3,-KM6	
2	COIL		-KM1,-KM2	
2	COIL		-KM4,-KM5	
2	COIL		-KM3,-KM6	
2	TIME DELAY BLOCK		-KM1,-KM4	
2	AUX. CONT. BLOCK		-KM1,-KM4	
2	AUX. CONT. BLOCK		-KM3,-KM6	
2	AUX. CONT. BLOCK		-KM2,-KM5	
3	CONTACTOR		KM8,KM9,KM10	
3	AUX. CONT. BLOCK		KM8,KM9,KM10	
2	AM-METER		-P1,-P2	
1	CIRCUIT BREAKER		-Q8	
1	CIRCUIT BREAKER		-Q2	
1	CIRCUIT BREAKER		-Q9	
1	CIRCUIT BREAKER		-Q10	
2	CURRENT TRANSF.		-T1,-T2	
34	TERMINALS		-X1,-X2,-X4	

DRAWN BY 20.02.01 JSB	CHECKED BY	APPR BY
PROJECT MJELLEM & KARLSEN A/S	TTS - Norlift AS MARINE CARGO GEAR	
DRWG NAME STARTER CABINET +V1 Crane no. 2078	SCALE	Sh. 1 of 1 sh.
	DRWG NO A4-9317	REV
MASTER DRWG	REPLACED BY	REPLACES

NOS	ITEM	TYPE/DRWG	POS	MANUFAC.
1	CABINET		+V2	
3	TEMP. AMPLIFIER		-B1,-B8,-B9	
1	PLC		-B3	
3	DRIVER MODUL		-B10,-B11,-B12	NORLIFT
3	DRIVER MODUL		B13,B14,B15	NORLIFT
1	Analog module		-B4	
2	THERMISTOR RELAY		-F3,-F4	
1	CONTACTOR		-KM15	
2	RELAY		-KA21,-KA22	
2	RELAY		-KA2,-KA3	
1	CIRCUIT BREAKER		-Q19	
1	CIRCUIT BREAKER		-Q18	
3	RELAY		KA10,KA11,KA19	
3	RELAY		KA12,KA13,KA20	
2	RELAY		-KA14,-KA15	
3	RELAY		KA16,KA17,KA18	
15	RELAY BASE			
1	TRANSFORMER		T3	
1	DC-POWER SUPPLY		-N1	
1	RECTIFIER		-N3	
1	DC POWER SUPPLY		-N2	
2	HOUR METER		-P3,-P4	
2	CIRCUIT BREAKER		-Q11,-Q12	
1	CIRCUIT BREAKER		-Q13	
2	CIRCUIT BREAKER		Q14,Q15	
1	CIRCUIT BREAKER		Q16	
1	CIRCUIT BREAKER		Q17	
9	DIODE TERMINAL		N51-N60	
2	TERMINAL POTM.		-R22,-R26	
1	TERMINAL POTMETER		-R11	

DRAWN BY 20.02.01 JSB	CHECKED BY	APPR BY
PROJECT MJELLEM & KARLSEN VERFT AS	TTS - Norlift AS MARINE CARGO GEAR	
DRWG NAME CONTROL CABINET +V2 Crane no. 2078	SCALE	Sh. 1 of 2 sh.
	DRWG NO A4-9318	REV
MASTER DRWG	REPLACED BY	REPLACES

2	SWITCH		-S4,-S7	
1	SWITCH		-S9	
2	CONT. BLOCK		-S7,-S8	
2	CONT. BLOCK		-S8	
1	SWITCH		-S8	
3	BRACKET		-X1	
40	TERMINALS		-X2	
54	TERMINALS		-X3	
90	TERMINALS		-X4	
7	TERMINALS		-X5	
34	TERMINALS		-X6	
NOS	ITEM	TYPE/DRWG	POS	MANUFAC.

DRAWN BY 20.02.01 JSB	CHECKED BY	APPR BY
PROJECT MJELLEM & KARLSEN VERFT AS	TTS - Norlift AS MARINE CARGO GEAR	
DRWG NAME CONTROL CABINET +V2 Crane no. 2078	SCALE	Sh. 2 of 2 sh.
	DRWG NO A4-9318	REV
MASTER DRWG	REPLACED BY	REPLACES

NOS	ITEM	TYPE/DRWG	POS	MANUFAC.
2	CONTROL BOX		+P1	
1	LIGHT PUSHBUTTON		-H10/-S12	
1	PUSHBUTTON		-S11	
1	PILOT LIGHT		-H2	
3	PILOT LIGHT		-H11,-H12,-H13	
2	PILOT LIGHT		-H14,-H15	
1	LIGHT PUSHBUTTON		-H27/-S27	
3	SWITCH		-S2,-S3,-S5	
1	SWITCH		-S6	
2	SWITCH		-S13,-S25	
1	CONT. BLOCK		-S6	
1	CONT. BLOCK		-S10	
1	EM-STOP PB		-S10	
1	LABEL		-S10	
2	KEY SWITCH		-S14,-S22	
1	KEY SWITCH		-S26	
2	PUSHBUTTON		-S19,-S20	
2	PUSHBUTTON		-S21,-S24	
2	JOYSTICK		-S30,-S31	
1	JUNCTION BOX		+P1	
1	POTMETER		-S23	
1	KNOB		-S23	
22	TERMINALS		-X2	
56	TERMINALS		-X3	

DRAWN BY 20.02.01 JSB	CHECKED BY	APPR BY
PROJECT MJELLEM & KARLSEN A/S	TTS - Norlift AS MARINE CARGO GEAR	
DRWG NAME OPERATION PANEL +P1 Crane no. 2078	SCALE	Sh. 1 of 1 sh.
	DRWG NO A4-9319	REV
MASTER DRWG	REPLACED BY	REPLACES

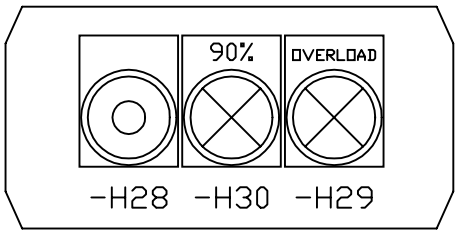

NOS	ITEM	TYPE/DRWG	POS	MANUFAC.
1	PANEL		+P5	
1	PILOT LIGHT		-H30	
1	PILOT LIGHT		-H29	
1	BUZZER		-H28	
2	LABEL		-H29,-H30	
1	TOP		-H30	
1	TOP		-H29	

DRAWN BY 20.02.01 JSB | CHECKED BY | APPR BY

PROJECT MJELLEM & KARLSEN VERFT AS

TTS - Norlift AS
MARINE CARGO GEAR

DRWG NAME SIGNAL PANEL +P5
Crane no. 2078

SCALE | Sh. 1 of 1 sh.

DRWG NO A4-9320 REV

MASTER DRWG | REPLACED BY | REPLACES

REV	ALTERATION	SIGN / DATE
1	Released for Instruction Manual	LIS 28.03.00

130 kg

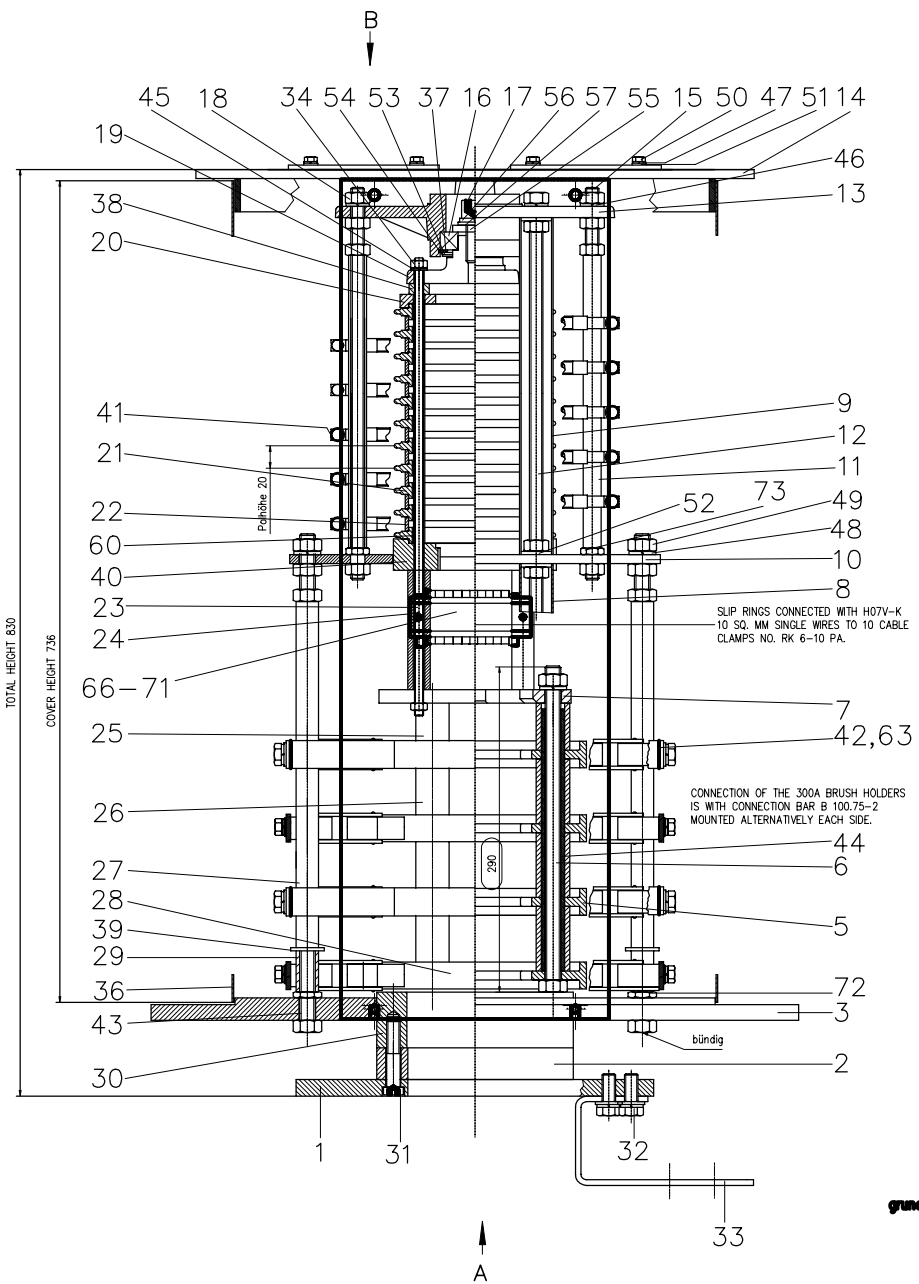

VIEW ON ARROW B

CABLE EXIT BRUSH SIDE THROUGH 6mm THICK BRASS PLATES.

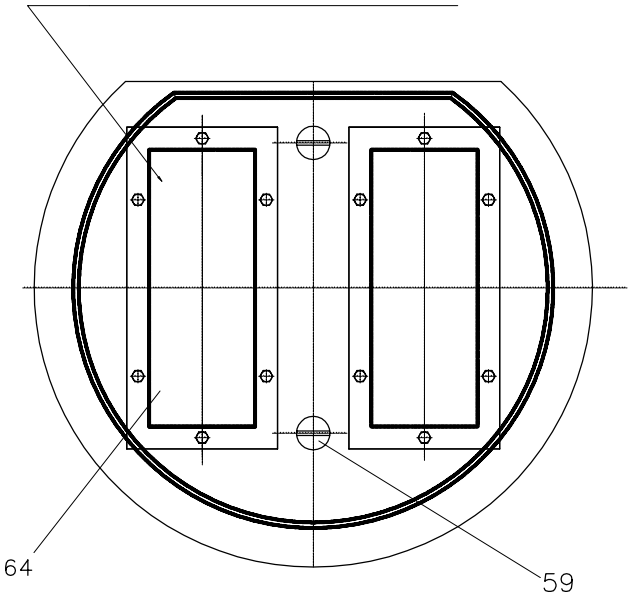

VIEW ON ARROW A

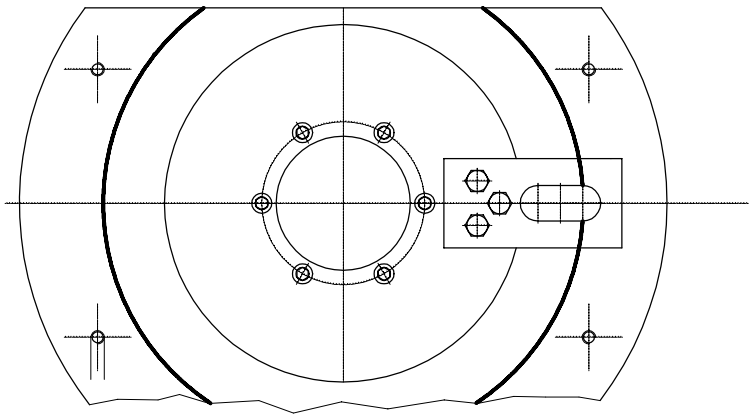

4x800A/690V

grundiert und weiß lackiert

10x60A/24V

IP44

NOS	ITEM / DIMENSION	POS	MATR / DRWG / ART NO	WEIGHT
2	NUT	73		
2	NUT	72		
1	DISTANCE WALL	71		
2	PLATE	70		
10	HOLDER	69		
		68		
2	SCREW	67		
2	SCREW	66		
		65		
2	PLATE	64	Ms	
4	CONNECTION	63	Cu	
		62		
		61		
3	TUBE	60		
2	SCREW	59		
		58		
1	RING	57		
1	RING	56		
1	PLATE	55		
1	PLATE	54	St. 37	
1	PLATE	53		
16	PLATE	52		
12	PLATE	51		
12	SCREW	50		
14	NUT	49		
3	RING	48		
12	RING	47		
10	RING	46		
3	RING	45		
3	TUBE	44		
2	THREADED BAR	43		
8	BRUSH HOLDER	42		
10	BRUSH HOLDER	41	BRONZE	
1	RING	40	GG18	
2	PLATE	39		
3	TUBE	38		
1	RING	37		
1	COVER	36	St. 37	
		35		
6	NUT	34		
1	PLATE	33	St. 37 VERNICKELT	
3	SCREW	32		
6	SCREW	31		
1	RING	30	GG18	
2	CASE	29	Ms	
1	RING	28	Ms 58 F 37	
2	TUBE	27		
9	TUBE	26		
3	TUBE	25		
3	DISTANCE TUBE	24	Ms	
3	THREADED BAR	23		
10	SLIPRING	22	Ms58	
11	ISULATION RING	21	PRESSTOFF	
1	PLATE	20	HGW 2082	
1	PLATE	19	GG18	
22	NUT	18		
1	PLATE	17		
1	SPHERICAL BEARING	16		
2	THREADED BAR	15		
1	PLATE	14	St. 37	
1	PLATE	13	GG18	
4	THREADED BAR	12		
2	TUBE	11		
1	PLATE	10	St. 34	
4	TUBE	9	AlMgSI0,5	
4	TUBE	8	AlMGSI0,5	
1	REDUCTION RING	7	GG18	
3	THREADED BAR	6		
3	SLIPRING	5	Ms 58 F 37	
		4		
1	BEARING PLATE	3	St. 37	
1	DISTANCE RING	2	GG18	
1	FLANGE	1	St. 37	

THIS DRAWING IS THE PROPERTY OF TTS-NORLIFT % AND MUST NOT BE REPRODUCED WITHOUT OUR WRITTEN CONSENT

DRAWN BY LIS 08.03.00 | CHECKED BY | APPR BY

PROJECT

TTS - Norlift AS
MARINE CARGO GEAR

DRWG NAME: SLIPRING

SCALE 1:2.5 | REV E

DRWG NO A1-8861-1

REPLACES | REPLACED BY | MASTER DRWG

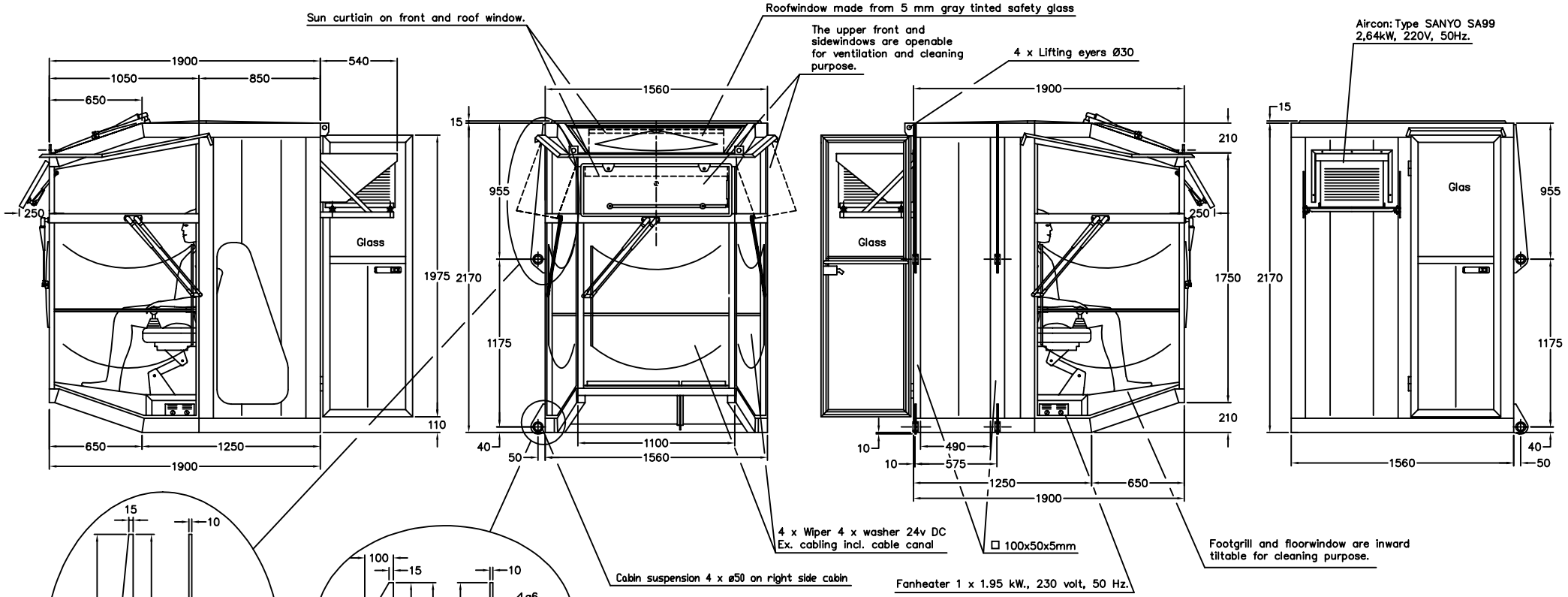

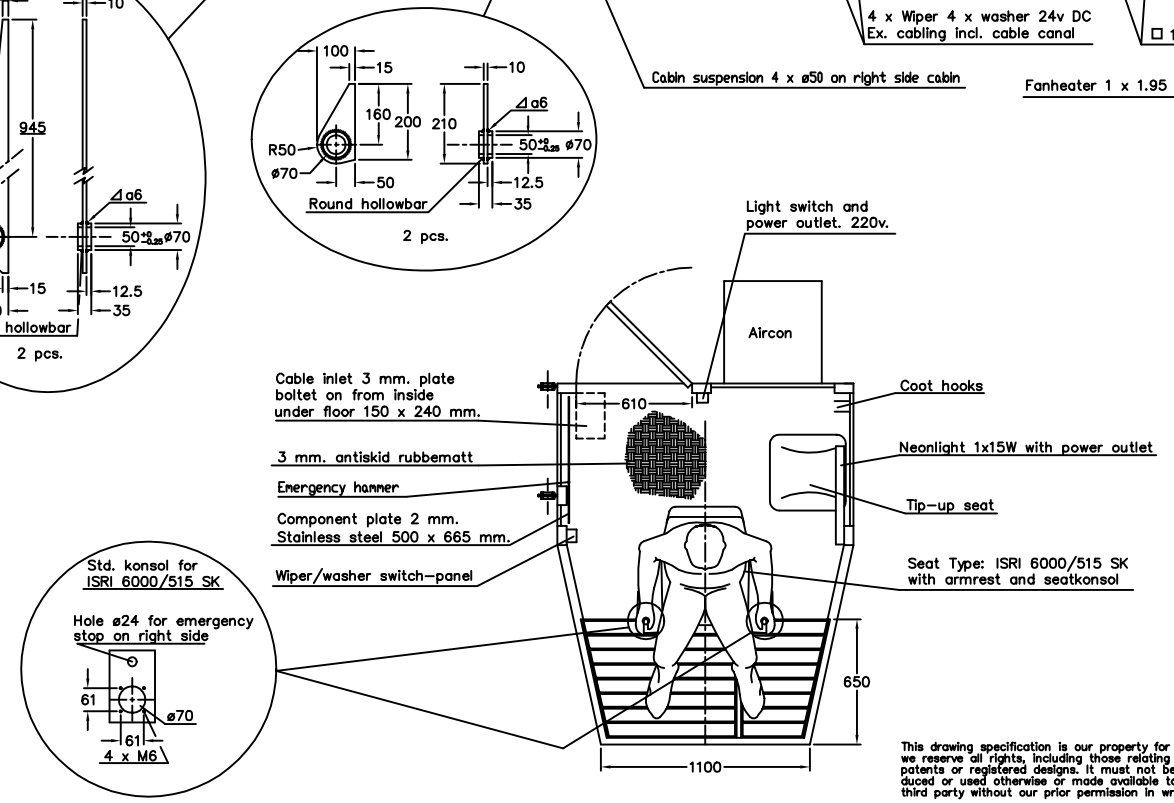

All glass are 5 mm green tinted safetyglass except
Roofwindow is 5 mm gray tinted safety glass
Floorwindow is 5 mm clear safetyglass
Roof and wallinsulation 20 mm grey foam.
Sunface treatment:
All steel sandblasted to SA2.5
Zinkmetallizing following by 50 micron Hempel 1536,
150 micron Hempel 1557 and 50 micron Hempel 5521
Total 250 micron colour RAL:

This drawing specification is our property for which we reserve all rights, including those relating to patents or registered designs. It must not be reproduced or used otherwise or made available to any third party without our prior permission in writing.

Partlist No.				Unless otherwise stated tolerances to DIN 7168-m	Surface texture to DIN/ISO 1302	Scale 1 : 20	Weight
Part No.		St				Material:	
R1		03/01	01	2000 Date	Name	Description	
				Dwg'n 21/12	K.J.	TTS-Norlift AS ScanCab 2500 Proj.: 2078	
				App.			
				Department			
				ScanCab		Drawing No. T11005R1	Class. No. / Page 1 / Pg 1
Rev.	Amendments	Date	Sgn.	Origin		Supersedes	Superseded by